FLOWSERVE

INSTALLATION OPERATION MAINTENANCE

CT6 Diaphragm Pump

Six-piston diaphragm pump for chemical transfer

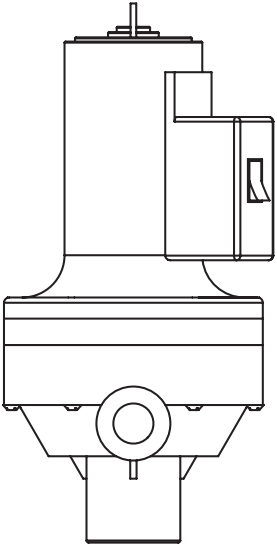

Experience In Motion

Contents

1. Introduction and safety.....3
1.1 General 3
1.2 Disclaimer 4
1.3 Copyright 4
1.4 Duty conditions.....5
1.5 Safety 5
2. Transport and storage 6
2.1 Consignment receipt and unpacking.....6
2.2 Storage.....6
2.3 Recycling at end of product life 6
3. Description.....7
3.1 Configurations.....7
3.2 Operating parameters 8
3.3 Available equipment and accessories 8
3.4 Materials of construction.....9
3.5 Chemical compatibility chart 9
4. Installation and operation.....13
4.1 Unpacking the pump 13
4.2 Starting the pump 13
4.3 Priming 13
4.4 Operating in different temperatures 13
4.5 Caged IBC tank mixing pump operation 13
4.6 Stopping and shutdown 15
4.7 Cleaning, storage and winterizing.....15
5. Maintenance 16
6. Spare parts 17

1. Introduction and safety

1.1 General

⚠ ***These instructions must always be kept close to the product's operating location or directly with the product.***

Flowserve products are designed, developed and manufactured with state-of-the-art technologies in modern facilities. The unit is produced with great care and commitment to continuous quality control, utilizing sophisticated quality techniques and safety requirements.

Flowserve is committed to continuous quality improvement and being at service for any further information about the product in its installation and operation or about its support products, repair and diagnostic services.

These instructions are intended to facilitate familiarization with the product and its permitted use. Operating the product in compliance with these instructions is important to help ensure reliability in service and avoid risks. The instructions may not take into account local regulations; ensure such regulations are observed by all, including those installing the product. Always coordinate repair activity with operations personnel, and follow all plant safety requirements and applicable safety and health laws and regulations.

⚠ ***These instructions must be read prior to installing, operating, using and maintaining the equipment in any region worldwide. The equipment must not be put into service until all the conditions relating to safety noted in the instructions have been met.***

1.2 Disclaimer

Information in these User Instructions is believed to be reliable. In spite of all the efforts of Flowserve to provide sound and all necessary information, the content of this manual may appear insufficient and is not guaranteed by Flowserve as to its completeness or accuracy.

Flowserve manufactures products to exacting International Quality Management System Standards as certified and audited by external Quality Assurance organizations. Genuine parts and accessories have been designed, tested and incorporated into the products to help ensure their continued product quality and performance in use. As Flowserve cannot test parts and accessories sourced from other vendors, the incorrect incorporation of such parts and accessories may adversely affect the performance and safety features of the products. The failure to properly select, install or use authorized Flowserve parts and accessories is considered to be misuse. Damage or failure caused by misuse is not covered by the Flowserve warranty. In addition, any modification of Flowserve products or removal of original components may impair the safety of these products in their use.

1.3 Copyright

All rights reserved. No part of these instructions may be reproduced, stored in a retrieval system, or transmitted in any form or by any means without prior permission of Flowserve.

1.4 Duty conditions

This product has been selected to meet the specifications of your purchase order. The acknowledgement of these conditions has been sent separately to the Purchaser. A copy should be kept with these instructions.

⚠ ***The product must not be operated beyond the parameters specified for the application. If there is any doubt as to the suitability of the product for the application intended, contact Flowserve for advice, quoting the serial number.***

1.5 Safety

1.5.1 Summary of safety markings: These User Instructions contain specific safety markings where non-observance of an instruction would cause hazards. The specific safety markings are:

⚠ ***This symbol indicates safety instructions where non-compliance would affect personal safety and could result in loss of life.***

1.5.2 Personnel qualification and training: All personnel involved in the operation, installation, inspection and maintenance of the unit must be qualified to carry out the work involved. If the personnel in question do not already possess the necessary knowledge and skill, appropriate training and instruction must be provided. If required, the operator may commission the manufacturer/supplier to provide applicable training.

Always coordinate repair activity with operations and health and safety personnel, and follow all plant safety requirements and applicable safety and health laws and regulations.

⚠ ***PUMP IS NOT TO BE USED IN POTENTIALLY EXPLOSIVE ATMOSPHERES.***

2. Transport and storage

2.1 Consignment receipt and unpacking

Immediately after receipt of the equipment, it must be verified for contents and inspected for damages in transportation. Any shortage and/or damage must be reported immediately to distributor/Flowserve Scienco and must be received within 10 days of receipt of the equipment. Later claims cannot be accepted.

Check any boxes or wrappings for any accessories or spare parts that may be packed separately with the equipment.

Each product has a unique serial number. Check that this number corresponds with that advised, and always quote this number in correspondence as well as when ordering spare parts or further accessories.

2.2 Storage

Normal packaging is designed to protect the pump and parts during shipment and storing.

2.3 Recycling at end of product life

At the end of the service life of the product, the relevant materials and parts should be recycled or disposed of using an environmentally acceptable method and in accordance with local regulations.

Make sure that hazardous substances are disposed of safely and that the correct personal protective equipment is used. The safety specifications must be in accordance with the current local regulations at all times.

3. Description

3.1 Configurations

The CT6 pump is the premier chemical transfer product, offering the best solution to various customer applications. A competitive analysis demonstrates the multiple CT6 pump advantages. Standard and high-flow versions of the CT6 pump provide for the competitive advantages in flow rate, liquid viscosity, handling and operating pressure.

Extremely simple design including housing (with the diaphragm with molded-in pistons, valves and valve plate, spacer and wobble plate assembly) and motor assembly, simplifies maintenance and field replacement.

The CT6 pump is designed to transfer chemicals from drums, intermediate bulk containers and mini bulk systems, as well as other containers.

The CT6 pump is powerful and versatile, capable of generating a pressure up to 2.0 bar (30 psi), and to pump viscous chemicals, even at low ambient temperatures (it is recommended to avoid use below liquid freezing point).

The 12-volt motor is engineered to produce flow rate up to 50 lpm (13 gpm) at 21°C (70°F) with a 30-minute duty cycle.

For application flexibility, the pump may be vertically, horizontally or side mounted. A convenient caddy system makes it highly portable. With its durable, lightweight tubular frame, the CT6 Caddy System is designed for maximum flexibility and ease of handling for users of multiple containers.

The CT6 pump is offered in standard and HF (high-flow) versions. Both versions can be configured with NPT or BSPP parts. An integrated closed system with Micro Matic® coupler is also an option.

The pump is chemically resistant. Polypropylene pump housings and peroxide-cured EPDM valves and seals are standard. Optional Santoprene™ valves with Santoprene or FKM seal configurations are also available.

3.2 Operating parameters

- Flows up to 50 lpm (13 gpm) for base model, and 68 lpm (18 gpm) for HF model
- Liquid pressure up to 2.0 bar (30 psi)
- Liquid temperatures up to 66°C (150°F)
- Operating current of 15 to 20 amps
- Dead head current of 25 to 29 amps

3.3 Available equipment and accessories

The CT6 pump is available in multiple configurations, each with varying equipment and accessories, including:

- Electronic meters
- Standard and special hoses
- Recirculation piping
- Various fittings and adapters
- Brackets
- Dispensing nozzles
- Dip-tubes

Refer to the Scienco Product Reference Manual FPD-1607 to learn more about the available configurations.

3.4 Materials of construction

The CT6 pump is resistant to corrosion from typical ag-chem and light industrial chemicals. Wetted materials include:

- Glass-filled polypropylene
- Stainless steel
- FKM*
- EPDM
- Santoprene

NOTE: Ensure chemical compatibility between liquid pumped and the pump wetted parts before using.

3.5 Chemical compatibility chart

Flowserve chemical compatibility chart disclaimer

The Flowserve chemical compatibility chart should be considered an illustrative guide only due to the many variables which may affect the compatibility of the materials and chemicals described herein. Actual decisions on materials used need to be tested and evaluated by the customer for each specific application. The responsibility of proper chemical compatibility of equipment and material used for the product is the full responsibility of the customer. Flowserve does not provide any warranty for product issues related to compatibility between material and chemicals.

Rating Legend	
A	Excellent
B	Good
X	Not recommended
	No rating

**Flowserve utilizes an FKM fluoroelastomer with similar properties and performance as the brand name Viton™ FKM.*

Herbicide*	EPDM	FKM	SANTOPRENE
B-4-D ESTER		B	B
ACCORD XRT II	A	A	A
ARMEZON PRO			X
ATRAZINE	A	A	A
BALANCE FLEXX	A	A	A
BASAGRAN 5L		B	B
CALLISTRO 480C	A		
CAPPRENO	A	A	A
DEGREE XTRA		A	
DICAMBA/XENTDIMAX	A		
DIFLEXX DUO	A	A	A
DURAMAX	A	A	A
DURANGO	A	A	A
ENGENIA	A		
ENLIST DUO	A	A	A
EVERGOL	A	A	A
FOLIARS		B	B
FOREFRONT	A		
FULTIME NXT		B	B
FUNGICICDE		B	B
GARION XA	A		
GAUCHO 600	A	A	A
GRAMOXONE/PARAQUAT		B	B
GRAZON P+D	A		
GRAZON NEXT	A		
HALEX GT	A		
HEADLINE AMP			X
HUSKIE		B	B
INSTINCT/NITROGEN STABILIZER			X
KEYSTONE-	A	A	

Herbicide*	EPDM	FKM	SANTOPRENE
KEYSTONE LA		B	B
LAUDIS	A	A	A
LEXAR EZ	A		
LIBERTY B80 SL	A		
LORSBAN 4E		B	B
LORSBAN Advance		B	B
LUMAX EZ	A		
MATADOR		B	B
MAX-IN ULTRA ZMB	A	A	A
MSO CROP OIL		B	B
NITROGEN BASED		B	B
N-SERVE B4		B	B
OUTLOOK			X
PARITY		B	B
PROSARO	A	A	A
PROWL H20	A		
PROWL X.X EC		B	B
RAXILPRO	A	A	A
RELY280	A	A	A
RESICORE			X
ROUNDUP	A	A	A
SHREDDER E-9		B	B
STRATEGO	A		
STRATEGO YLD	A		
STYLET OIL		B	B
SURESTART			X
SURESTART II			X
SURPASS EC	A		X
TACOMA		B	
TOP NOTCH	A		

Herbicide*	EPDM	FKM	SANTOPRENE
TODON 22K	A		
VERDICT	B		X
WARRANT/PARAQUAT		B	B
WOLVERINE ACID		B	B
LI 700 SURFACTANT	A		B
ACURON	B		
DELTA COMPLETE	B		
TRIVAPRO	X	B	
MIRAVIS TOP		B	
VELTYMA		A	
SEQUENCE	B	X	
QUICK ULTRA			
TERRAMAR	A	A	
REAX ZINC	A		
BLACKMAXX 22	A	A	
REAX BORON	B	A	B
SCOUT	A		
SOLARA 500		A	
OSBAR 500 WP (TERRAIN, VALOR, APPARENT TERRITORY)	X	X	X

**Trademarks are the property of their respective owners.*

4. Installation and operation

4.1 Unpacking the pump

Unpack the pump, and make sure that pump configuration and materials of construction are correct for your application. Make all necessary connections. Use Teflon® tape as required.

4.2 Starting the pump

Ensure that hoses and fittings are tightly connected. Ensure that switch is in OFF position before making the electrical connection.

For 12V version, attach battery clips securely to the power source (battery or power supply). For the 115V version, plug power cord into a GFCI outlet.

4.3 Priming

If the connections are free of leaks, the pump will prime within seconds of startup.

4.4 Operating in different temperatures

It is not recommended to start the pump if the temperature is below 0°C (32°F) for AG and below -11°C (12°F) for DEF, or higher than 66°C (150°F) for both.

4.5 Caged IBC tank mixing pump operation

The advanced mixing pump is a 2-in-1 mixing and pumping solution that allows users to mix and keep chemicals in suspension as well as dispense fluid without unnecessary tool changes or wasted set-up time.

4.5.1 Assembly and installation

- Cut 1 in. recirculation hose to length and attach to three-way ball valve and IBC cap.
- Cut 0.25 in. air tubing to length and attach to 0.25 in. push-to-connect fittings on suction end of the pump and the IBC cap.
- Cut 1.25 in. hose to length and attach to suction end of pump and IBC tank outlet.
- Thread down pipe to the bottom of the IBC cap.
- Optionally secure the air tubing to the recirculation hose with provided tab bands.
- When assembling, point the eductor nozzle on the down pipe toward a back corner of the tank for optimal mixing.

Assembly section views

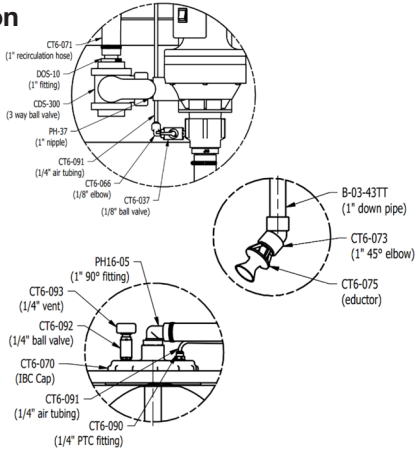

Mixing pump cross-section

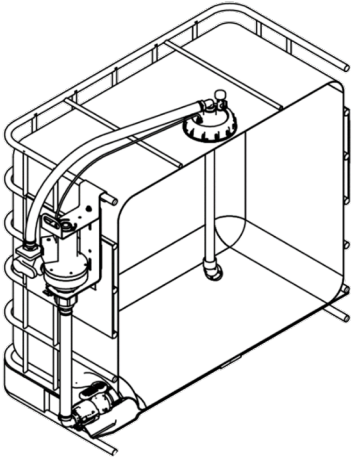

4.5.2 Operation

- Open the valve (CT6-092) on the top of the tank to prevent vacuum pressure from building in during mixing or pumping.
- Adjust the air induced agitation to mixing needs by tuning air valve (CT6-037) on the suction inlet of the pump. Optimal mixing typically occurs when the valve is partially open.

4.6 Stopping and shutdown

- At the end of the operation, turn the pump switch OFF and disconnect the cord.

4.7 Cleaning, storage and winterizing

4.7.1 Standard cleaning and storage

- The pump should be drained, and any chemicals should be flushed from the pump with fresh water before storage.
- Prolonged exposure to water or chemicals will cause irreparable damage.

4.7.2 Winterizing

For storage in freezing temperatures:

- Ensure proper PPE and safety procedures are applied during the following procedure.
- Submerge inlet of pump in clean water. Turn on the pump and allow to recycle the water. Open and close bypass by operating shut-off nozzle several times.
- Anti-freeze can have a negative impact on hosing; remove all hosing that will be re-used. Submerge the pump inlet into 100% anti-freeze and turn on the pump. Run the pump until fluid comes out of discharge port.
- Store the pump filled or coated with anti-freeze.

5. Maintenance

⚠ It is the final operator's responsibility to ensure that all maintenance steps are carried out by authorized and qualified personnel who have adequately familiarized themselves with the subject matter by studying this manual in detail.

6. Spare parts

Pump nomenclature

The following example explains how the part number identifies key construction features. Example: CT6-1E5CA-00.

CT6-XXXXX-XXX

UNIQUE PUMP MODEL IDENTIFIER

Motor
1 - 12V standard green
2 - 12V standard blue**
3 - 12V HF
4 - 115V

Material (Seals/Valves)
E - EPDM/EPDM
V - FKM/FKM
S - Santoprene/Santoprene

Housing
3 - NPT-MM
4 - BSPP-MM
5 - NPT-NPT
6 - BSPP-BSPP

Configuration
A - Advanced Mixing
B - Bare
D - Caddy
C - CES
G - Cage
S - Seed Tr.
M - Mix

Market
A - AG
D - DEF

****NOTE:** 12V Std blue motor discontinued, and replaced by 12V Std green motor as standard.

Ordering of spare parts

Flowserve keeps records of all pumps that have been supplied via serial number, and offers a number of kits for pump servicing needs. Replacement parts are sold as kits only. Please contact your Flowserve sales rep or distributor for spare parts.

Item	Description
CT6-001	Motor assembly (green 12V)
CT6-002*	Motor assembly HF
CT6-003*	**Housing** - Inlet: MM, Outlet: NPT
CT6-004*	**Housing** - Inlet: MM, Outlet: BSPP
CT6-005	**Housing** - Inlet: NPT, Outlet: NPT
CT6-006*	**Housing** - Inlet: BSPP, Outlet: BSPP
CT6-007	Wobble plate
CT6-008	Bushing
CT6-009*	Bushing HF
CT6-010	Spacer (aluminum)
CT6-011	Diaphragm
CT6-013	Valve plate
CT6-014*	Valve plate HF
CT6-014V	FKM valve plate

** Optional*

Item	Description
CT6-015	Valves (peroxide EPDM)
CT6-016	Valve, FKM
CT6-017	Bypass support
CT6-018	Bearing
CT6-023	Screw (wobble plate)
CT6-024	Screw (housing)
CT6-039	Valve, Santoprene
CT6-040	O-ring, Santoprene
CT6-041	Bypass seal, Santoprene
DD6P-46W	Stainless steel washer
SS6P-41	Bypass valve
EP-94	Bypass valve spring
SS6P-35EPDM	Bypass valve gasket
SS6P-35*	Bypass valve gasket FKM
S10-08	O-ring
S10-04	O-ring (FKM)

Exploded view

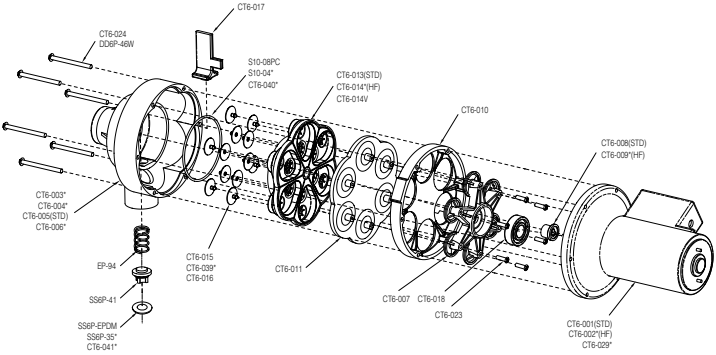

NOTE: All spare parts are sold only as complete kits.
Individual parts not available.

Motor kits

Item #	Qty.	Description
CT6KIT-101	1	12V motor assembly, green, with switch and cable
CT6KIT-102	1	12V HF motor assembly, gray, with switch and cable
CT6KIT-104	1	115V motor assembly, blue, with switch and cable

Motor assembly

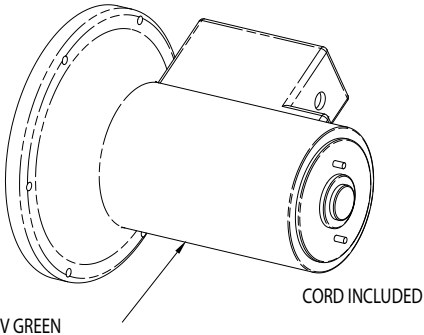

CT6-001, 12V GREEN
CT6-002, 12V, GREY(HF)
CT6-029, 115V, BLUE

Wobble plate kits

Item #	Description
CT6KIT-601	**Wobble plate assembly, spacer and diaphragm**

Kit includes:

Item #	Qty.	Description
CT6-019	1	Wobble plate assembly with 3DGR bushing
CT6-023	6	Screw #8 X 3/4, plastite, zinc plated, for wobble plate
CT6-010	1	Spacer, aluminum A380
CT6-011	1	Diaphragm, Santoprene 101/201-64, with molded-in inserts

Item #	Description
CT6KIT-602	**Wobble plate assembly, spacer and diaphragm, HF**

Kit includes:

Item #	Qty.	Description
CT6-020	1	Wobble plate assembly HF with 3.7DGR bushing
CT6-023	6	Screw #8 X 3/4, plastite, zinc plated, for wobble plate
CT6-010	1	Spacer, aluminum A380
CT6-011	1	Diaphragm, Santoprene 101/201-64, with molded-in inserts

Wobble plate assembly

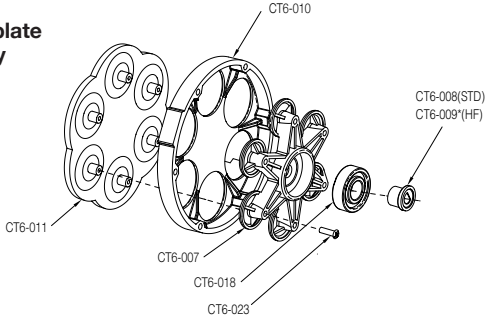

Valve plate kits

Item #	Description
CT6KIT-301	**Kit, valve plate, EPDM valves and O-ring**

Kit includes:

Item #	Qty.	Description
CT6-019	1	Valve plate, PP, black
CT6-015	12	Valve, EPDM
S10-08	1	O-ring, EPDM, #152

Item #	Description
CT6KIT-302	**Kit, valve plate, FKM valves and O-ring**

Kit includes:

Item #	Qty.	Description
CT6-014V	1	FKM valve plate, PP, black
CT6-016	12	Valve, FKM, CT6
S10-04	1	O-ring, FKM, #152

Item #	Description
CT6KIT-303	**Kit, valve plate, Santoprene valves and O-ring**

Kit includes:

Item #	Qty.	Description
CT6-013	1	Valve plate, PP, black
CT6-039	12	Valve, Santoprene, CT6
S10-040	1	O-ring, Santoprene, #152

Item #	Description
CT6KIT-304	**Kit, valve plate HF, EPDM valves and O-ring**

Kit includes:

Item #	Qty.	Description
CT6-014	1	Valve plate HF, PP, black
CT6-015	12	Valve, EPDM
S10-08	1	O-ring, EPDM, #152

Item #	Description
CT6KIT-305	**Kit, valve plate HF, FKM valves and O-ring**

Kit includes:

Item #	Qty.	Description
CT6-014V	1	FKM valve plate HF, PP, black
CT6-016	12	Valve, FKM, CT6
S10-04	1	O-ring, FKM, #152

Item #	Description
CT6KIT-306	**Kit, valve plate HF, Santoprene valves and O-ring**

Kit includes:

Item #	Qty.	Description
CT6-014	1	Valve plate HF, PP, black
CT6-039	12	Valve, Santoprene, CT6
S10-040	1	O-ring, Santoprene, #152

Valve plate assembly

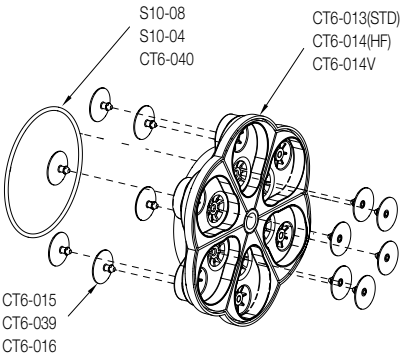

NOTE: All spare parts are sold only as complete kits.
Individual parts not available.

Pump housing kits

Pump housing assembly

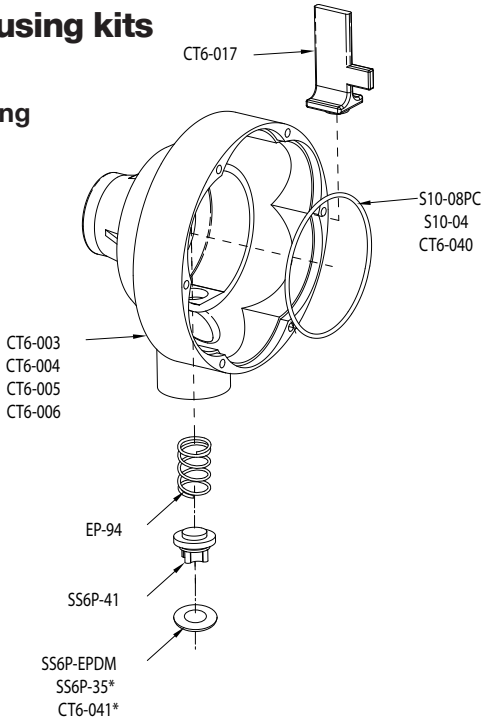

Item #	Description
CT6KIT-201	**Kit, housing, EPDM, NPT-MM, 3-pin MM coupler**

Kit includes:

Item #	Qty.	Description
CT6-003	1	Assembly, sleeve and housing, inlet MM, outlet 1 in. NPT, PP, black
CT6-017	1	Bypass valve support, PP, black
EP-94	1	SS spring ST102495
SS6P-41	1	Bypass valve body
SS6P-35EPDM	1	Gasket, cartridge bypass, EPDM
S10-08	1	O-ring, EPDM, #152
PH-83	1	1 in. NPT AG Micro Matic valve assembly — 3-pin
CT6-024	6	Screw, 5/16 hex washer head, 10-32 X 2.5, SS, for housing

Item #	Description
CT6KIT-202	**Kit, housing, MM-BSPP, 4-pin MM coupler, EPDM**

Kit includes:

Item #	Qty.	Description
CT6-004	1	Assembly, sleeve and housing, inlet MM, outlet 3/4 in. BSPP, PP, black
CT6-017	1	Bypass valve support, PP, black
EP-94	1	SS spring ST102495
SS6P-41	1	Bypass valve body
PH-73	1	Micro Matic SS valve assembly for DEF 4-pin
SS6P-35EPDM	1	Gasket, cartridge bypass, EPDM
S10-08	1	O-ring, EPDM, #152
CT6-024	6	Screw, 5/16 hex washer head, 10-32 X 2.5, SS, for housing

Item #	Description
CT6KIT-203	**Kit, housing, inlet 2 in. NPT, outlet 1 in. NPT, EPDM**

Kit includes:

Item #	Qty.	Description
CT6-005	1	Assembly, sleeve and housing, inlet 2 in. NPT, outlet 1 in. NPT, PP, black
CT6-017	1	Bypass valve support, PP, black
EP-94	1	SS spring ST102495
SS6P-41	1	Bypass valve body
SS6P-35EPDM	1	Gasket, cartridge bypass, EPDM
S10-08	1	O-ring, EPDM, #152
CT6-024	6	Screw, 5/16 hex washer head, 10-32 X 2.5, SS, for housing

Item #	Description
CT6KIT-204	**Kit, housing, BSPP-BSPP, EPDM**

Kit includes:

Item #	Qty.	Description
CT6-006	1	Assembly, sleeve and housing, inlet 1 in. BSPP, outlet 3/4 in. BSPP, PP, black
CT6-017	1	Bypass valve support, PP, black
EP-94	1	SS spring ST102495
SS6P-41	1	Bypass valve body
SS6P-35EPDM	1	Gasket, cartridge bypass, EPDM
S10-08	1	O-ring, EPDM #152
CT6-024	6	Screw, 5/16 hex washer head, 10-32 X 2.5, SS, for housing

Item #	Description
CT6KIT-205	**Kit, housing, MM-NPT, FKM**

Kit includes:

Item #	Qty.	Description
CT6-003	1	Assembly, sleeve and housing, inlet MM, outlet 1 in. NPT, PP, black
CT6-017	1	Bypass valve support, PP, black
EP-94	1	SS spring ST102495
SS6P-41	1	Bypass valve body
PH-83	1	1 in. NPT AG Micro Matic valve assembly — 3-pin
SS6P-35	1	94 bypass FKM seal
S10-04	1	O-ring, FKM, #152
CT6-024	6	Screw, 5/16 hex washer head, 10-32 X 2.5, SS, for housing

Item #	Description
CT6KIT-207	**Kit, housing, NPT-NPT, FKM**

Kit includes:

Item #	Qty.	Description
CT6-005	1	Assembly, sleeve and housing, inlet 2 in. NPT, outlet 1 in. NPT, PP, black
CT6-017	1	Bypass valve support, PP, black
EP-94	1	SS spring ST102495
SS6P-41	1	Bypass valve body
SS6P-35	1	94 bypass FKM seal
S10-04	1	O-ring, FKM, #152
CT6-024	6	Screw, 5/16 hex washer head, 10-32 X 2.5, SS, for housing

Item #	Description
CT6KIT-209	**Kit, housing, MM-NPT, Santoprene**

Kit includes:

Item #	Qty.	Description
CT6-003	1	Assembly, sleeve and housing, inlet MM, outlet 1 in. NPT, PP, black
CT6-017	1	Bypass valve support, PP, black
EP-94	1	SS spring ST102495
SS6P-41	1	Bypass valve body
PH-83	1	1 in. NPT AG Micro Matic valve assembly — 3-pin
CT6-041	1	Bypass, Santoprene seal, CT6
CT6-040	1	O-ring, Santoprene, #152
CT6-024	6	Screw, 5/16 hex washer head, 10-32 X 2.5, SS, for housing

Item #	Description
CT6KIT-211	**Kit, housing, NPT-NPT, Santoprene**

Kit includes:

Item #	Qty.	Description
CT6-005	1	Assembly, sleeve and housing, inlet 2 in. NPT, outlet 1 in. NPT, PP, black
CT6-017	1	Bypass valve support, PP, black
EP-94	1	SS spring ST102495
SS6P-41	1	Bypass valve body
CT6-041	1	Bypass, Santoprene seal, CT6
CT6-040	1	O-ring, Santoprene, #152
CT6-024	6	Screw, 5/16 hex washer head, 10-32 X 2.5, SS, for housing

Item #	Description
CT6KIT-404	**Kit, Air Line Assembly, Advanced Mixing Unit**

Kit includes:

Item #	Qty.	Description
CT6-066	1	Fitting, elbow, 1/8 in. MPT x 1/4 in. push-to-connect
CT6-090	1	Fitting, straight, 1/4 in. MPT x 1/4 in. push-to-connect
CT6-091	1	Tubing, 1/4 in. push-to-connect, 52 in. long
TAB BAND-01	3	Tab band, 4.00 in. flat length
DD6M-101	1	PTFE tape

Item #	Description
CT6KIT-408	**Kit, Vent Plug Assembly, Advanced Mixing Unit**

Kit includes:

Item #	Qty.	Description
CT6-092	1	Ball valve, 1/4 in. NPT
CT6-093	1	Vent, 1/4 in. NPT
DD6M-101	1	PTFE tape

Product warranty

Flowserve Corporation (the Company) warrants the following Scienco Equipment for the periods below:

- Scienco CT6 Diaphragm Pump warranty period shall be if it appears within sixty (60) months from the initial Equipment startup or sixty-six (66) months after shipment, whichever occurs first.
- Scienco Meters, Systems, and Accessories warranty period shall be if it appears within twelve (12) months from the initial Equipment startup or until eighteen (18) months after shipment, whichever occurs first.

Warranty of Equipment shall be free from defects in materials and workmanship within the periods outlined above, that the Equipment or any part thereof does not conform to this warranty, and Buyer so notifies the Company in writing within a reasonable time after discovery shall there upon promptly correct such nonconformity by repair or replacement EXW Flowserve's factory.

The Company's sole obligation and Buyer's sole remedy under this warranty is repair or replacement at the Company's election. The Company shall not be responsible for any on-site costs, including removal and reinstallation of any warranted Equipment. All Equipment repaired or replaced will be re-warranted only for the remainder of the original warranty period. THE EXPRESS WARRANTY SET FORTH HEREIN IS THE EXCLUSIVE WARRANTY OF THE COMPANY, AND NO OTHER WARRANTY, EITHER EXPRESSED OR IMPLIED, INCLUDING WARRANTY OF MERCHANTABILITY OR FITNESS FOR PURPOSE, SHALL APPLY.

Flowserve is not responsible for repairs or alterations made by others without manual written agreement between the Company and Buyer. The Company does not warrant the Equipment or any repair/replacement part against the effects of erosion, corrosion, or normal wear and tear due to operation or the environment. The warranty and remedies set forth herein are conditioned upon proper storage, installation, use and maintenance of the Equipment in all material respects, and in accordance with the Company's written recommendations.

The remedies set forth herein are exclusive, and the total liability of the Company with respect to this Equipment, or any breach thereof, whether based on contract, warranty, tort (including negligence), indemnity, strict liability or otherwise, shall not exceed the order price of the specific Equipment which gives rise to the claim. In all cases where Buyer claims damages allegedly arising out of defective or nonconforming Equipment or Services, Buyer's exclusive remedies and the Company's sole liability shall be those specifically provided for under the Warranty.

IN NO EVENT, WHETHER ARISING BEFORE OR AFTER COMPLETION OF ITS OBLIGATIONS UNDER THE CONTRACT, SHALL SELLER BE LIABLE FOR SPECIAL, INDIRECT, CONSEQUENTIAL, INCEDENTAL OR PUNITIVE DAMAGES OF ANY KIND (INCLUDING BUT NOT LIMITED TO LOSS OF USE, REVENUE OR PROFITS, INVENTORY OR CHARGES, OVERHEAD, COST OF CAPITAL, OR CLAIMS OF CUSTOMERS) INCURRED BY THE BUYER OR ANY THIRD PARTY.

Technical Service & Support

3900 Cook Blvd.
Chesapeake, VA 23323-1628 USA
Website: www.flowserve.com
Email: csb@flowserve.com

Flowserve Corporation
5215 North O'Connor Blvd.
Suite 700
Irving, Texas 75039-5421 USA

Flowserve Scienco
3900 Cook Blvd.
Chesapeake, VA 23323-1628 USA
Website: www.flowserve.com
Email: csb@flowserve.com

PUIOM002052-03 (EN/QL) April 2025
(formerly PCN 75707883)

Flowserve Corporation has established industry leadership in the design and manufacture of its products. When properly selected, this Flowserve product is designed to perform its intended function safely during its useful life. However, the purchaser or user of Flowserve products should be aware that Flowserve products might be used in numerous applications under a wide variety of industrial service conditions. Although Flowserve can provide general guidelines, it cannot provide specific data and warnings for all possible applications. The purchaser/user must therefore assume the ultimate responsibility for the proper sizing and selection, installation, operation, and maintenance of Flowserve products. The purchaser/user should read and understand the Installation Instructions included with the product, and train its employees and contractors in the safe use of Flowserve products in connection with the specific application.

While the information and specifications contained in this literature are believed to be accurate, they are supplied for informative purposes only and should not be considered certified or as a guarantee of satisfactory results by reliance thereon. Nothing contained herein is to be construed as a warranty or guarantee, express or implied, regarding any matter with respect to this product. Because Flowserve is continually improving and upgrading its product design, the specifications, dimensions and information contained herein are subject to change without notice. Should any question arise concerning these provisions, the purchaser/user should contact Flowserve Corporation at any one of its worldwide operations or offices.

©2025 Flowserve Corporation. All rights reserved. This document contains registered and unregistered trademarks of Flowserve Corporation. Other company, product, or service names may be trademarks or service marks of their respective companies.

flowserve.com