FLOWSERVE

USER INSTRUCTIONS

DMX/DMXD/DMXH/DMXDH centrifugal pumps

Multistage, single/double suction, horizontally split volute type centrifugal pumps

PCN = 85392728 – 10/09 (E)

Original instructions

Installation
Operation
Maintenance

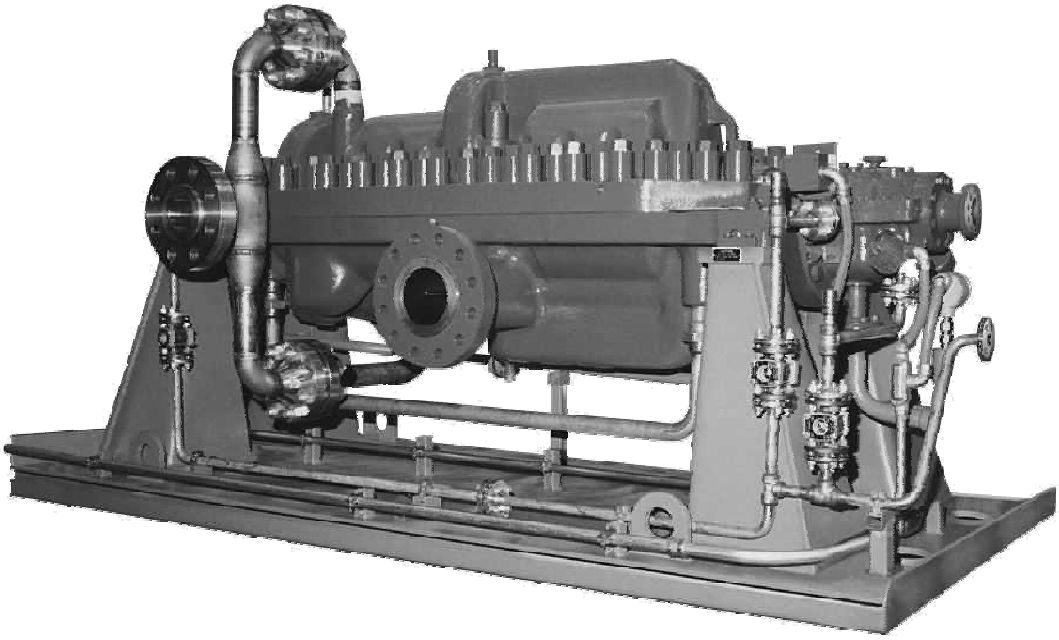

SLEEVE/KTB CONFIGURATION

⚠ ***These instructions must be read prior to installing, operating, using and maintaining the equipment.***

Experience In Motion

CONTENTS

PAGE

1 INTRODUCTION AND SAFETY 3
1.1 General 3
1.2 CE marking and approvals 3
1.3 Disclaimer 3
1.4 Copyright 3
1.5 Duty conditions 3
1.6 Safety 4
1.7 Warning labels 7
1.8 Specific machine performance 8
1.9 Noise level 8
2 TRANSPORT AND STORAGE 10
2.1 Consignment receipt and unpacking 10
2.2 Handling 10
2.3 Lifting 10
2.4 Extended storage 11
2.5 Recycling and end of product life 14
3 PUMP DESCRIPTION 15
3.1 Configurations 15
3.2 Name nomenclature 15
3.3 Design of major parts 15
3.4 Performance and operating limits 16
4 INSTALLATION 17
4.1 Location 17
4.2 Foundation 17
4.3 Grouting 18
4.4 Initial alignment 20
4.5 Piping 24
4.6 Electrical connections 26
4.7 Final shaft alignment check 27
4.8 Protection systems 27
5 COMMISSIONING, START-UP, OPERATION AND SHUTDOWN 28
5.1 Precommissioning procedure 28
5.2 Pump lubricants 29
5.3 Impeller wearring clearance 31
5.4 Direction of rotation 31

PAGE

5.5 Guarding 31
5.6 Priming and auxiliary supplies 31
5.7 Starting the pump 31
5.8 Running or operation 31
5.9 Stopping and shutdown 32
5.10 Hydraulic, mechanical and electrical duty 32
6 MAINTENANCE 34
6.1 Maintenance schedule 34
6.2 Spare parts 35
6.3 Recommended spares and consumable items 35
6.4 Tools required 35
6.5 Fastener torques 35
6.6 Disassembly 36
6.7 Examination of parts 39
6.8 Assembly of pump and seal 40
7 FAULTS; CAUSES AND REMEDIES 47
8 PARTS LIST AND DRAWINGS 49
9 CERTIFICATION 55
10 OTHER RELEVANT DOCUMENTATION AND MANUALS 55
10.1 Supplementary user instruction manuals . 55
10.2 Change notes 55
10.3 Additional sources of information 55
10.4 Customer Data Sheet 56

1 INTRODUCTION AND SAFETY

1.1 General

These Instructions must always be kept close to product's operating location or directly with the product.

Flowserve's products are designed, developed and manufactured with state-of-the-art technologies in modern facilities. The unit is produced with great care and commitment to continuous quality control, utilising sophisticated quality techniques, and safety requirements.

Flowserve is committed to continuous quality improvement and being at service for any further information about the product in its installation and operation or about its support products, repair and diagnostic services.

These instructions are intended to facilitate familiarization with the product and its permitted use. Operating the product in compliance with these instructions is important to help ensure reliability in service and avoid risks. The instructions may not take into account local regulations; ensure such regulations are observed by all, including those installing the product. Always coordinate repair activity with operations personnel, and follow all plant safety requirements and applicable safety and health laws/regulations.

These instructions must be read prior to installing, operating, using and maintaining the equipment in any region worldwide. The equipment must not be put into service until all the conditions relating to safety, noted in the instructions, have been met. Failure to follow and apply the present user instructions is considered to be misuse. Personal injury, product damage, delay or failure caused by misuse are not covered by the Flowserve warranty.

1.2 CE marking and approvals

It is a legal requirement that machinery and equipment put into service within certain regions of the world shall conform with the applicable CE Marking Directives covering Machinery and, where applicable, Low Voltage Equipment, Electromagnetic Compatibility (EMC), Pressure Equipment Directive (PED) and Equipment for Potentially Explosive Atmospheres (ATEX).

Where applicable, the Directives and any additional Approvals, cover important safety aspects relating to machinery and equipment and the satisfactory provision of technical documents and safety instructions. Where applicable this document incorporates information relevant to these Directives and Approvals. To confirm the Approvals applying and if the product is CE marked, check the serial number plate markings and the Certification, see section 9, *Certification.*

1.3 Disclaimer

Information in these User Instructions is believed to be reliable. In spite of all the efforts of Flowserve to provide sound and all necessary information the content of this manual may appear insufficient and is not guaranteed by Flowserve as to its completeness or accuracy.

Flowserve manufactures products to exacting International Quality Management System Standards as certified and audited by external Quality Assurance organisations. Genuine parts and accessories have been designed, tested and incorporated into the products to help ensure continued product quality and performance in use. As Flowserve cannot test parts and accessories sourced from other vendors the incorrect incorporation of such parts and accessories may adversely affect the performance and safety features of the products. The failure to properly select, install or use authorised Flowserve parts and accessories is considered to be misuse. Damage or failure caused by misuse is not covered by Flowserve's warranty. In addition, any modification of Flowserve products or removal of original components may impair the safety of these products in their use.

1.4 Copyright

All rights reserved. No part of these instructions may be reproduced, stored in a retrieval system or transmitted in any form or by any means without prior permission of Flowserve Corporation.

1.5 Duty conditions

This product has been selected to meet the specifications of your purchaser order. The acknowledgement of these conditions has been sent separately to the Purchaser. A copy should be kept with these instructions.

The product must not be operated beyond the parameters specified for the application. If there is any doubt as to the suitability of the

product for the application intended, contact Flowserve for advice, quoting the serial number.

If the conditions of service on your purchase order are going to be changed (for example liquid pumped, temperature or duty) it is requested that the user seeks Flowserve's written agreement before start up.

1.6 Safety

1.6.1 Summary of safety markings

These user instructions contain specific safety markings where non-observance of an instruction would cause hazards. The specific safety markings are:

DANGER This symbol indicates electrical safety instructions where non-compliance will involve a high risk to personal safety or the loss of life.

This symbol indicates safety instructions where non-compliance would affect personal safety and could result in loss of life.

This symbol indicates "hazardous substances and toxic fluid" safety instructions where non-compliance would affect personal safety and could result in loss of life.

CAUTION This symbol indicates safety instructions where non-compliance will involve some risk to safe operation and personal safety and would damage the equipment or property.

This symbol indicates explosive atmosphere marking according to ATEX. It is used in safety instructions where non-compliance in the hazardous area would cause the risk of an explosion.

This symbol indicates is used in safety instructions to remind not to rub non-metallic surfaces with a dry cloth; ensure cloth is damp. It is used where non-compliance in the hazardous area would cause the risk of an explosion.

Note: This sign is not a safety symbol but indicates an important instruction in the assembly process.

1.6.2 Personnel qualification and training

All personnel involved in the operation, installation, inspection and maintenance of the unit must be qualified to carry out the work involved. If the personnel in question do not already possess the necessary knowledge and skill, appropriate training and instruction must be provided. If required the operator may commission the manufacturer / supplier to provide applicable training.

Always co-ordinate repair activity with operations and health and safety personnel, and follow all plant safety requirements and applicable safety and health laws and regulations.

1.6.3 Safety action

This is a summary of conditions and actions to prevent injury to personnel and damage to the environment and to equipment. (For products used in potentially explosive atmospheres section 1.6.4 also applies.)

CAUTION Prevent excessive external pipe load Do not use pump as a support for piping. Do not mount expansion joints, unless authorized by Flowserve in writing, so that their force, due to internal pressure, acts on the pump flange.

CAUTION Ensure correct lubrication (See section 5, *Commissioning, startup, operation and shutdown*.)

CAUTION Start the pump with outlet valve partly opened (Unless otherwise instructed at a specific point in the user instructions). This is recommended to minimize the risk of overloading at full flow and damaging the pump at zero flow. Pumps may be started with the valve further open only on installations where this situation cannot occur. The pump outlet control valve may need to be adjusted to comply with the duty following the run-up process. (See section 5, *Commissioning start-up, operation and shutdown*.)

CAUTION Never run the pump dry.

CAUTION Inlet valves to be fully open when pump is running. Running the pump at zero flow or below the recommended minimum flow continuously will cause damage to the pump and seals. Low flow rates may cause a reduction in pump/bearing life,

overheating of the pump, instability and cavitation/ vibration.

CAUTION Do not run the pump at abnormally high or low flow rates. Operating at a flow rate higher than normal or at a flow rate with no backpressure on the pump may overload the motor and cause pump cavitation.

DANGER ***Never do maintenance work when the unit is connected to power.***

When the pump is handling hazardous liquids care must be taken to avoid exposure to the liquid by appropriate sitting of the pump, limiting personnel access and by operator training. If the liquid is flammable and/or explosive, strict safety procedures must be applied.

HANDLING COMPONENTS
Many precision parts have sharp corners and the wearing of appropriate safety gloves and equipment is required when handling these components. To lift heavy pieces above 25 kg (55 lb) use an appropriate crane for the mass and in accordance with current local regulations.

Coupling guards must not be removed while the pump is operational.

THERMAL SHOCK
Rapid changes in the temperature of the liquid within the pump will cause thermal shock, which can result in damage or breakage of components and should be avoided.

HOT (and cold) PARTS
If hot or freezing components or auxiliary heating supplies can present a danger to operators and persons entering the immediate area action must be taken to avoid accidental contact. If complete protection is not possible, the machine access must be limited to maintenance staff only, with clear visual warnings and indicators to those entering the immediate area. Note: bearing housings must not be insulated and drive motors and bearings may be hot.

If the temperature is greater than 68 ℃ (154℉) or below -5 ℃ (20 ℉) in a restricted zone, or exceeds local regulations, action as above shall be taken.

1.6.4 Products used in potentially explosive atmospheres

Ex Measures are required to:

- Avoid excessive temperature
- Prevent the build up of explosive mixtures
- Prevent the generation of sparks
- Prevent leakages
- Maintain the pump to avoid hazard

The following instructions for pumps and pump units when installed in potentially explosive atmospheres must be followed to help ensure explosion protection. Both electrical and non-electrical equipment must meet the requirements of European Directive 94/9/EC.

1.6.4.1 Scope of compliance

Ex Use equipment only in the zone for which it is appropriate. Always check that the driver, drive coupling assembly, seal and pump equipment are suitably rated and/or certified for the classification of the specific atmosphere in which they are to be installed.

Where Flowserve has supplied only the bare shaft pump, the Ex rating applies only to the pump. The party responsible for assembling the ATEX pump set shall select the coupling, driver and any additional equipment, with the necessary CE Certificate/ Declaration of Conformity establishing it is suitable for the area in which it is to be installed.

The output from a variable frequency drive (VFD) can cause additional heating effects in the motor and so, for pumps sets with a VFD, the ATEX Certification for the motor must state that it is covers the situation where electrical supply is from the VFD. This particular requirement still applies even if the VFD is in a safe area.

1.6.4.2 Marking

An example of ATEX equipment marking is shown below. The actual classification of the pump will be engraved on the nameplate.

II 2 GD c IIB 135 ºC (T4)

Equipment Group
I = Mining
II = Non-mining

Category
2 or M2 = High level protection
3 = normal level of protection

Gas and/or Dust
G = Gas; D= Dust

c = Constructional safety
(in accordance with prEN13463-5)

Gas Group (Equipment Group II only)
IIA - Propane (Typical)
IIB - Ethylene (Typical)
IIC - Hydrogen (Typical)

Maximum surface temperature (Temperature Class)
(See section 1.6.4.3.)

1.6.4.3 Avoiding excessive surface temperatures

ENSURE THE EQUIPMENT TEMPERATURE CLASS IS SUITABLE FOR THE HAZARD ZONE

Pumps have a temperature class as stated in the ATEX Ex rating on the nameplate. These are based on a maximum ambient temperature of 40 ℃ (104 ℉); refer to Flowserve for higher ambient temperatures.

The temperature of the liquid handled influences the surface temperature on the pump. The maximum permissible liquid temperature depends on the ATEX temperature class and must not exceed the values in the table that follows.

The temperature rise at the seals and bearings and due to the minimum permitted flow rate is taken into account in the temperatures stated.

Temperature class to prEN 13463-1	Maximum surface temperature permitted	Temperature limit of liquid
T6	85 ℃ (185 ℉)	Consult Flowserve
T5	100 ℃ (212 ℉)	Consult Flowserve
T4	135 ℃ (275 ℉)	115 ℃ (239 ℉) *
T3	200 ℃ (392 ℉)	180 ℃ (356 ℉) *
T2	300 ℃ (572 ℉)	275 ℃ (527 ℉) *
T1	450 ℃ (842 ℉)	400 ℃ (752 ℉) *

*The table only takes the ATEX temperature class into consideration. Pump design or material as well as component design or material may further limit the maximum working temperature of the liquid.

The responsibility for compliance with the specified maximum liquid temperature is with the plant operator.

If an explosive atmosphere exists during the installation, do not attempt to check the direction of rotation by starting the pump unfilled. Even a short run time may give a high temperature resulting from contact between rotating and stationary components. Where there is any risk of the pump being run against a closed valve generating high liquid and casing external surface temperatures, the users shall fit an external surface temperature protection device.

Avoid mechanical, hydraulic or electrical overload by using motor overload trips, temperature monitor or a power monitor and make routine vibration monitoring checks.

In dirty or dusty environments, regular checks shall be made and dirt removed from areas around close clearances, bearing housings and motors.

1.6.4.4 Preventing the build up of explosive mixtures

ENSURE THE PUMP IS PROPERLY FILLED AND VENTED AND DOES NOT RUN DRY

Ensure the pump and relevant suction and discharge pipeline system is totally filled with liquid at all times during the pump operation, so that an explosive atmosphere is prevented. In addition it is essential to make sure that seal chambers, auxiliary shaft seal systems and any heating and cooling systems are properly filled. If the operation of the system cannot avoid this condition, users shall fit an appropriate dry run protection device (e.g. liquid detection or a power monitor).

To avoid potential hazards from fugitive emissions of vapor or gas to atmosphere the surrounding area shall be well ventilated.

1.6.4.5 Preventing sparks

To prevent a potential hazard from mechanical contact, the coupling guard must be non-sparking and anti-static for Category 2.

To avoid the potential hazard from random induced current generating a spark, the baseplate shall be properly grounded.

Avoid electrostatic charge: do not rub non-metallic

surfaces with a dry cloth; ensure cloth is damp.

The coupling must be selected to comply with 94/9/EC and correct alignment must be maintained.

1.6.4.6 Preventing leakage

Ex The pump shall only be used to handle liquids for which it has been approved to have the correct corrosion resistance.

Avoid entrapment of liquid in the pump and associated piping due to closing of suction and discharge valves, which could cause dangerous excessive pressures to occur if there is heat input to the liquid. This can occur if the pump is stationary or running.

Bursting of liquid containing parts due to freezing must be avoided by draining or protecting the pump and ancillary systems.

Where there is the potential hazard of a loss of a seal barrier fluid or external flush, the fluid shall be monitored.

If leakage of liquid to atmosphere can result in a hazard, then a liquid detection device shall be installed.

1.6.4.7 Maintenance to avoid the hazard

Ex CORRECT MAINTENANCE IS REQUIRED TO AVOID POTENTIAL HAZARDS WHICH GIVE A RISK OF EXPLOSION

The responsibility for compliance with maintenance instructions is with the plant owner or operator.

To avoid potential explosion hazards during maintenance, the tools, cleaning and painting materials used must not give rise to sparking or adversely affect the ambient conditions. Where there is a risk from such tools or materials, maintenance must be conducted in a safe area.

A maintenance plan and schedule shall be adopted. (See section 6, *Maintenance*).

1.7 Warning labels

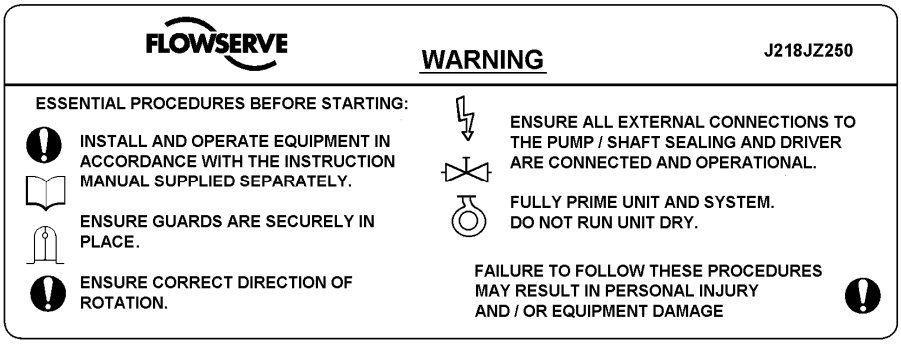

Oil lubricated units only:

J218JZ262

WARNING	THIS MACHINE MUST BE FILLED WITH OIL BEFORE STARTING
ATTENTION	CETTE MACHINE DOIT ÊTRE REMPLIE D'HUILE AVANT LA MISE EN MARCHE
ACHTUNG	DIESE MASCHINE IST VOR DEM STARTEN MIT ÖL ZÜ FULLEN
WAARSCHUWING	DEZE MACHINE MOET VOOR HET STARTEN MET OLIE GEVULD WORDEN

CDC: 603 604 610 612 621 623 624

1.8 Specific machine performance

For performance parameters see 10.4 *Customer Data Sheet.* When the contract requirement specifies these to be incorporated into User Instructions these are included here. Where performance data has been supplied separately to the purchaser these should be obtained and retained with these User Instructions if required.

1.9 Noise level

Attention must be given to the exposure of personnel to the noise, and local legislation will define when guidance to personnel on noise limitation is required, and when noise exposure reduction is mandatory. This is typically 80 to 85 dBA.

The usual approach is to control the exposure time to the noise or to enclose the machine to reduce emitted sound. You may have already specified a limiting noise level when the equipment was ordered, however if no noise requirements were defined, then attention is drawn to the following table to give an indication of equipment noise level so that you can take the appropriate action in your plant.

Pump noise level is dependent on a number of operational factors, flow rate, pipework design and acoustic characteristics of the building, and so the values given are subject to a 3 dBA tolerance and cannot be guaranteed.

1.9.1 Pump noise levels

The following tables may be used to determine the estimated sound pressure levels (SPL), expressed in dBA (dB), for DMX/DMXD/DMXH/DMXDH pumps.

The values shown have been derived from actual noise test data and are based on the following conditions:

a) Equipment is located in a free field above a reflecting plane in which the reduction in noise level in all directions is 6 dB in each octave band for each doubling of distance.

b) Background noise is 10 dB (minimum) below all noise levels in each octave band.

c) The values shown are at a distance of 1 m (3.281 ft), horizontally from major pump surfaces and 1.5 m (4.78 ft) above the floor using the standard pressure reference of 20 µPa (0.00002 N/m^2).

d) Overall noise level, dBA ("A" scale) is determined at points of maximum noise level, and the values of all mid-band frequencies are basis "C" scale readings.

1.9.2 Overall noise level

Tables below show dBA levels for two stage and three or more stage pumps, based on the best efficiency point BEP at design RPM and required impeller diameter.

For specific gravities less than 1.0, use 1.0 specific gravity. For specific gravities above 1.0, use the actual specific gravity.

When the required condition flow falls outside the range of 75% to 125% of BEP, a Part Load Correction (PLC) must be added to the noise levels as follows:

Percent of BEP at required Impeller Diameter	PLC DB
74 to 62 % or 126 to 136 %	+1
61 to 50 % or 137 to 150 %	+2
49 to 38 %	+3
37 to 25 %	+4

Brake Horse Power at Best Efficiency Point.	dBA
2 Stage pump	
250 to 350	87
350 to 500	88
500 to 700	89
700 to 940	90
940 to 1100	91
1100 to 1300	92
1300 to 1500	93
Above 1500, contact Flowserve	94

Brake Horse Power at Best Efficiency Point.	dBA
3 to 14 Stages	
90 to 110	79
110 to 140	80
140 to 180	81
180 to 220	82
220 to 280	83
280 to 360	84
360 to 450	85
450 to 560	86
560 to 720	87
720 to 900	88
900 to 1125	89
1125 to 1400	90
1400 to 1800	91
1800 to 2250	92
2250 to 2800	93
2800 to 3600	94
3600 to 4500	95
4500 to 5700	96
5700 to 7200	97
7200 to 9000	98
9000 to 11,000	99
11,000 to 14,000	100

1.9.3 Combined noise levels for pump and driver components

When two or more sources produce noises that are sufficiently unrelated (so that interference effects do not occur) the total combined noise level may be obtained by a simple addition of dB values according to the below table.

Difference between two levels to be Combined, dB	Add to higher level to obtain Combined level, dB
0	3
1	2.5
2	2
4	1.5
6	1
9	0.5
10	0

2 TRANSPORT AND STORAGE

2.1 Consignment receipt and unpacking

Immediately after receipt of the equipment it must be checked against the delivery/shipping documents for its completeness and that there has been no damage in transportation.

Any shortage and or damage must be reported immediately to Flowserve and received in writing within one month of receipt of the equipment. Later claims cannot be accepted.

Check any crates, boxes and wrappings for any accessories or spare parts which may be packed separately with the equipment or attached to side walls of the box or equipment.

Each product has a unique serial number. Check that this number corresponds with that advised and always quote this number in correspondence as well as when ordering spare parts or further accessories.

2.1.1 Receipt inspection

Note: The following information regarding receiving is only offered as a general guideline to the customer. Flowserve requires that all receiving be conducted in accordance with specifications set forth in Chapter 3, *Jobsite Receiving and Protection* from API Recommended Practices 686/PIP REIE 686, First Edition.

The pump and its associated equipment were carefully inspected at the factory prior to shipment to ensure quality compliance. It is suggested that the pump be inspected upon arrival and that any irregularities or damage be reported to the carrier immediately.

The condition of the skid and covering is indicative of the way the shipment was handled. Broken skids, torn coverings, bent hold-down bolts, broken straps, etc. indicate rough handling.

The protective covers on the pump nozzles should be in place and undamaged.

2.1.2 Unpacking

The pump should arrive already mounted on the baseplate and it is therefore suggested that the unpacking of the equipment should proceed per instruction as outlined in this manual.

In general, care is to be taken when removing crating, coverings, and strapping in order not to damage any auxiliary equipment and/or the paint finish.

2.1.3 Paint/rust preventive

Internal parts of the pump and bearing housings are protected prior to shipment with a rust preventive such as Dasco guard 2408M. This can be removed with petroleum solvents.

External non-machined surfaces are painted with one of applicable Flowserve coating.

Parts ordered separately are protected with a rust preventive such as Dasco guard 2408M. This can be removed with petroleum solvents.

2.2 Handling

Boxes, crates, pallets or cartons may be unloaded using forklift vehicles or slings dependent on their size and construction.

2.3 Lifting

CAUTION To avoid distortion, the pump unit should be lifted as shown.

TRAINED PERSONNEL

A crane must be used for all pump sets in excess of 25 kg (55 lb). Fully trained personnel must carry out lifting, in accordance with local regulations. The driver and pump weights are recorded on their respective nameplates or mass plates.

2.3.1 Lifting equipment

Note: The following information regarding lifting is only offered as a general guideline. Flowserve requires that all lifting and rigging be performed in accordance with specifications set forth in Chapter 2, *Lifting and Rigging* from API Recommended Practices 686/PIP REIE 686, First Edition.

EQUIPMENT CAPACITY

Make sure that any equipment used to lift the pump or any other of its components is capable of supporting the total weight encountered. Make sure that all parts are properly rigged before attempting to lift.

2.3.2 To lift unit

CAUTION The complete unit with pump, driver and auxiliary equipment all mounted on the baseplate can NOT be lifted as a unit. Driver must be removed from baseplate before lifting. To lift unit sling baseplate from all lifting eyes. Failure to do this may result in permanent deformation of baseplate. Damage to baseplate caused by mishandling or improper setting prior to grouting is not covered by Flowserve's warranty.

2.3.3 To lift driver

Refer to driver manufacturers instructions.

2.3.4 To lift pump

Install sling from overhead hoist and under bearing housing mounting brackets (cast portion of casing where bearing housings attach).

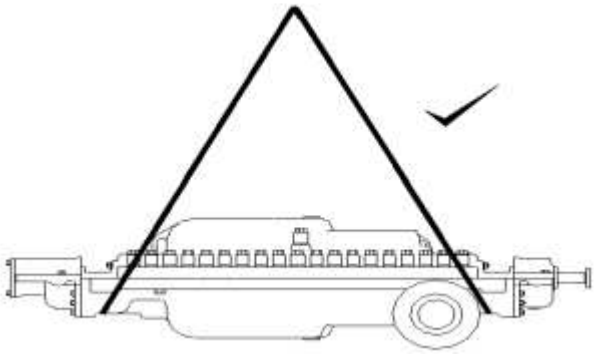

Proper lifting practice for pump

LIFTING PRACTICE
Do not lift entire pump from cast lifting lugs on upper half casings. These lugs are for lifting upper half casing only.

2.3.5 To lift half casing

To lift upper half casing, rig to overhead hoist from cast lifting lugs provided.

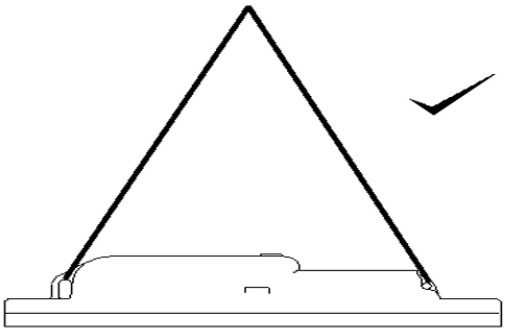

Proper lifting practice for upper case

To lift the pump bottom half casing, slings can be attached to the pump feet, casing boltholes or padded slings can be used around the outer casing.

2.3.6 To lift pump rotor

Using slings that will not damage shaft, rig around shaft close to the impellers and to overhead hoist. Carefully lift rotor from lower half casing.

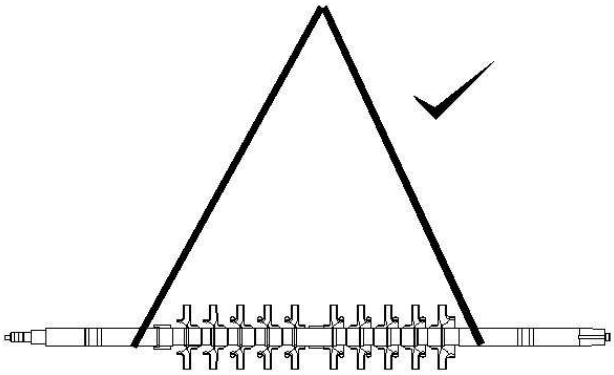

Proper lifting practice for pump

2.4 Extended storage

Note: The following information regarding receiving is only offered as a general guideline. Flowserve requires that all receiving be conducted in accordance with specifications set forth in Chapter 3, *Jobsite Receiving and Protection* from API recommended Practices 686/PIP REIE 686, First Edition.

During extended periods of storage prior to installation and from the time of installation until commercial operation, precautions must be taken to protect the pump from deterioration. The various parts of the pump are protected prior to shipment by applying varying grades of preservative and paint. However, during shipment and handling, the preservatives are subjected to conditions that can cause their removal. Also, during extended periods of time, the preservatives may deteriorate. The following procedures should be followed to prevent deterioration of the pump during the extended storage period. These procedures may also be supplemented by the experience of the person(s) performing the tasks.

It should be noted, that unless otherwise agreed to, full responsibility and costs associated with the storage and inspection of this equipment rests with the customer.

CAUTION If pump is equipped with a mechanical seal and is stored or has not been run for 1 year or more, the mechanical seal must be removed before start-up and faces re-lapped to guard against the possibility of seal leakage. When reinstalling the seal, new “O” rings and gaskets must be used.

2.4.1 Pump inspection upon arrival

When the pump is received, it should be inspected for damage or other signs of rough handling. Any damage if found should be reported to the carrier immediately.

Inspect the preservative coating on the various parts. If necessary, renew the preservative in areas where it has rubbed off or scraped.

Inspect all painted surfaces. If necessary, touch up the areas where paint has been chipped or scraped.

Inspect all covers over pump openings and piping connections. If covers or seals for the covers are damaged or loose, they are to be removed, and a visual inspection made of the accessible interior areas for accumulation of foreign materials or water. If necessary, clean and re-coat the interior parts with preservative to restore the parts to the “as shipped” condition. Install or replace covers and fasten secure.

2.4.2 Storage area

When selecting a storage area, the following should be taken into consideration:

a) The deterioration of the equipment will be proportionate to the class/type of storage provided.

b) The expenses involved in restoring the equipment at time of operation will be proportionate to the class/type of storage provided.

2.4.3 Storage preferred (dry)

If at all possible, the pump and its components should be stored indoors where they will be protected from the elements. If it is not possible to store the pump and its components indoors, precautions must be taken to protect them from the elements. Regardless of whether storage is inside or outside, the storage area should be vibration-free. All boxes that are marked for inside storage must be stored indoors. Coverings of heavy gauge plastic sheets, canvas, waterproof burlap or other suitable coverings should protect the pump and its components from dirt, dust, rain, snow or other unfavorable conditions when stored outdoors.

All equipment must be placed upon skids or blocks to prevent contact with the ground and surface contaminants. Equipment must be adequately supported to prevent distortion and bending.

2.4.3.1 Rotor storage

It is recommended that pump rotor be removed from pump and stored vertically. Rotors may also be stored horizontally in the pump. Rotors that have to be stored horizontally outside the pump must be supported close to impeller to eliminate sag that may cause rotor to take a permanent set.

2.4.3.2 Customer inspection

The stored equipment is to be placed on a periodic inspection schedule by the customer.

Note: The responsibility for setting up an inspection and maintenance schedule rests with the customer and will be dependent upon the class/type of storage provided. It will be expected that initially inspection would occur weekly, then depending upon the inspection reports being favorable or unfavorable, inspection would continue weekly, monthly, or quarterly, as may be determined. Inspection reports must be kept on file.

Every inspection should consist of a general surface inspection.

a) Pump supports are firmly in place.

b) Pump covers over openings are firmly in place.

c) Pump coverings, plastics or tarps, are firmly in place. Any holes or tears must be repaired to prevent entrance of dirt or water.

d) Pump covers are periodically removed from openings and interior accessible areas inspected. If surface rusting has occurred, clean and repaint or re-coat with preservative.

e) If rusting occurs on exterior surfaces, clean and repaint or re-coat with preservative.

f) Loosen casing drain plugs to allow seepage of any accumulated moisture.

g) If the rotor is stored horizontally, rotate pump rotor 1-1/4 revolutions at least once a month to prevent rotor from taking a permanent set.

CAUTION Make sure bearings have adequate lubrication before turning rotor.

CAUTION The oil inlet blanking plates should be removed and a small amount of oil injected into the bearings before turning. Refit blanking plates.

h) Periodically remove bearing covers and inspect for accumulation of moisture, rust and foreign material. As required, clean bearings and bearing housing and re-preserve. Install bearing cover and secure to assure maximum protection. Bearings removed for storage should be coated with preservative, wrapped in oil/wax paper, and stored in a warm dry area.

i) Check individually wrapped parts for signs of deterioration. If necessary, renew preservative and wrapping.

CAUTION If storage is over one month, Instrumentation (Controls, Electrical devices, Temperature switches) should be removed and placed in a climate control environment if Instrumentation is not powered up.

2.4.3.3 Prior to installation maintenance

Six months prior to the scheduled installation date, a Flowserve representative is to be employed to conduct an inspection. All costs involved during inspection, dismantling, restoration, replacement of parts, and reassembly will be the responsibility of the customer. The customer will supply all necessary labor, tools, and cranes. This inspection will include (not necessarily in its entirety) but not be limited to the following:

a) An inspection of all periodic inspection records as kept on file by the customer, and all inspection reports that have been compiled during the storage period.

b) An inspection of the storage area to determine the “as stored” condition of the equipment prior to any protection being removed.

c) An inspection of the equipment with protection covers and flange covers removed.

d) Depending upon the length of time the equipment was stored, the class/type of storage provided, (i.e.: indoor, heated, unheated, ground floor, concrete floor, out-of-doors, under roof, no roof, waterproof coverings, on concrete, on ground) and as a result of the inspection of a, b and c above, Flowserve representative may require a partial or complete dismantling of the equipment.

e) Dismantling may necessitate restoration of painted or preserved surfaces, and/or replacement of gaskets, “O” rings and mechanical seal and bearings. Use only Flowserve recommended replacement materials.

Upon completion of the inspection, the Flowserve representative shall submit a report to the Customer, and to the Manager of Customer Service, stating in detail the result of the inspection.

If there are any discrepancies identified, it is the customer's responsibility for correction before initial startup.

2.4.4 Storage non-preferred (wet)

It is not recommended that the rotor be subjected to extended periods of submergence or wetting prior to start-up. However, it is recognized that in some cases, a long period of time may lapse from installation until commercial operation.

If the pump must be stored after being installed and wetted, the following inspection and maintenance should be performed.

- Isolate the pump with valving - tag (seal) all valves.
- Preserve the pump internals.

Note: If storage is over one month, Instrumentation (Controls, Electrical devices, Temperature switches) should be removed and placed in a climate controlled environment if Instrumentation is not powered up.

CAUTION Electric motors (pump driver) should not be stored in damp places without special protection (refer to *motor manufacturer’s instructions*).

2.4.4.1 Corrosive pumpage.

Fill entirely the pump with an approved preservative such as #2004-Chempagard 9 from Chempak. The pump should be filled to highest level possible, affording the greatest protection possible to all internal parts of the pump.

This solution, when drained, will result in a thin residual oil film (less than 0.0127 mm (0.0005 in.)) on all internals after the water has evaporated. This residue provides added corrosion protection until pump is again filled with liquid or put into service.

Note: Pump cannot be fully drained. Volutes in the lower half cannot be drained below the bottom of the main casing bore.

2.4.4.2 Non-corrosive pumpage.

Fill pump with pumpage to the highest level possible. Open periodically drain connection to drain off any moisture that may have accumulated. Refill to highest level possible. Drain and inspect pump prior to start-up.

a) Rotate pump rotor 1-1/4 revolutions at least once a month.

CAUTION Make sure bearings have adequate lubrication before turning rotor.

b) Periodically remove bearing covers and inspect for accumulation of moisture, rust and foreign material. As required, clean bearings and bearing housing and re-preserve. Install bearing cover and secure to assure maximum protection.

2.4.4.3 Painting and preservation

Paints and preservatives used are either Flowserve standard or special as required by the contract specification. Refer to 2.1.3, *Paint/Rust Preventive* for the description of paints and preservatives used in this order or contact the branch office through which the order was placed.

2.5 Recycling and end of product life

At the end of the service life of the product or its parts, the relevant materials and parts should be recycled or disposed of using an environmentally acceptable method and local regulations. If the product contains substances which are harmful to the environment, these should be removed and disposed of in accordance with current regulations. This also includes the liquids and or gases in the "seal system" or other utilities.

Make sure that hazardous substances or toxic fluids are disposed of safely and that the correct personal protective equipment is used. The safety specifications must be in accordance with the current regulations at all times.

3 PUMP DESCRIPTION

The “DMX” is a multistage single or double suction, opposed impeller, horizontally split volute pump.

The suction and discharge nozzles are cast integral with the lower half casing. Rotating parts are accessible by removing the upper half casing, which can be removed without breaking suction and discharge piping.

3.1 Configurations

The DMX can have the following configurations:

3.1.1 Single suction

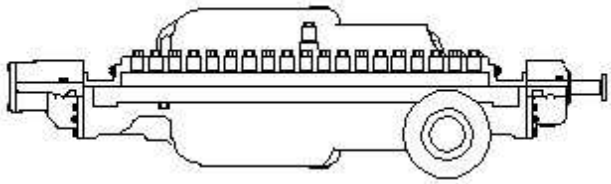

Single suction configuration

Single suction impeller at first stage (DMX)

3.1.2 Double suction

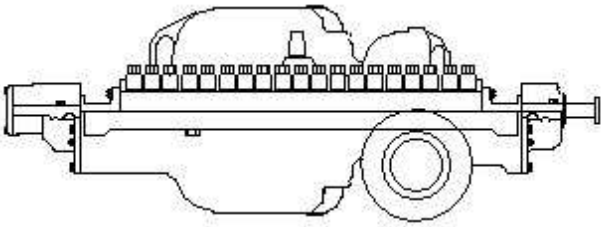

Double suction configuration

Double suction impeller at the first stage (DMXD)

3.2 Name nomenclature

The pump nomenclature is: **3X10DMX10**

The 3 is the pump discharge size

The X is the separator

The 10 is the nominal impeller size

The DMX is pump type

The 10 is the number of stages and depending on pump size, they go from 2 to 14 stages

DMX= Single suction standard pressure
DMXD = Double suction standard pressure
DMXH = Single suction high pressure
DMXDH = Double suction high pressure

3.3 Design of major parts

3.3.1 Casing

The casing provides for immediate containment of the liquid being pumped, while directing the flow of liquid from the suction nozzle to the impellers and subsequently through the volute to the discharge nozzle.

The casing halves are sealed by the use of a gasket and are joined together by studs, which are installed in the lower half casing and fastened with washers and cap-nuts.

3.3.2 Impellers

The series’ impellers are single suction, enclosed type, and one-piece construction and are dynamically balanced. They are fitted with renewable impeller rings (front and back), which are held in place by headless set-screws.

The impellers are keyed and have a shrink fit to the pump shaft. They are held in axial position by a split ring.

3.3.3 Casing rings

Casing rings are positioned over the impeller front rings. These rings are tubular and renewable.

3.3.4 Channel rings

Renewable cast channel rings are positioned over the impeller back rings. They divide the casing into stages. These rings are horizontally split and are held together by shoulder screws or dowel pins.

3.3.5 Center sleeve

A renewable type center sleeve is used under the center bushing. The center sleeve is tubular and keyed to the shaft (via the impeller key).

3.3.6 Center bushing

The renewable center bushing is horizontally split, and the two halves are held together by socket head cap screws and taper dowel pins. It is held in position by the raised annular ring of the bushing engaging the annular groove in the casing. The center bushing, in conjunction with center sleeve, divides the casing at the center (back to back) impellers.

3.3.7 Throttling sleeve
Renewable type throttling sleeve is used under the throttling bushing. The throttling sleeve is tubular, keyed, has a shrink fit to the shaft, and is held in position by a split ring.

3.3.8 Throttling bushing
Renewable type throttling bushing is used. It is held in position by the raised annular ring of the bushing engaging the annular groove in the casing. The throttling bushing, in conjunction with the throttling sleeve, allows pressure to be bled off through the balance line, so that pressure on the Seal Chambers is balanced. The throttling bushing also balances the axial thrust of the pump rotor.

3.3.9 Crossover sleeve
A renewable type crossover sleeve under crossover bushing is only used on double suction pumps (DMXD/DMXDH). The crossover sleeve is tubular, keyed, has a shrink fit to the shaft, and is held in position by a split ring.

3.3.10 Crossover bushing
A renewable type crossover bushing is only used on double suction pumps (DMXD/DMXDH). The crossover bushing is horizontally split, and the two halves are held together by taper dowel pins. It is held in position by the raised annular ring of the bushing engaging the annular groove in the casing. The crossover bushing, in conjunction with crossover sleeve, controls the leakage between the first and second stage impellers.

3.3.11 Shaft
The high strength shaft is ground over its entire length to close tolerances. The shaft is designed to transmit the required power without vibration and is stepped at each impeller fit for ease of assembly and disassembly.

3.3.12 Bearings
The sleeve bearings are carbon steel backed, babbitt lined, sleeve type insert bearings. The renewable bearing inserts are mounted in bearing housings kept from rotating by means of stop pins.
Each bearing is lubricated by an external pressure supply system.

The thrust bearing is of the titling type with pads on each side of the shaft mounted thrust collar. It is capable of transmitting the thrust load in either direction. It is lubricated from the pressure lubrication system.

3.3.13 Seal Chambers
The Seal Chambers are cast integral with the casing. Your pump is typically shipped with the mechanical seal already installed.

The mechanical seal is designed to suit each application. This creates the correct seal loading face when seal gland is bolted in place.

Cartridge type mechanical seals are preset at the seal manufacturer's facility and require no field settings. The seal installation should be checked before startup.

Refer to the mechanical seal manufacturers drawing and instructions found in section 8 of this manual for detailed information.

3.4 Performance and operating limits
Refer to section 10.4 *Customer Data Sheet.*

4 INSTALLATION

Note: The installation/commissioning of this equipment must be conducted in accordance with API Recommended Practices 686/PIP REIE 686 - First Edition.

Copies of API Recommended 'Practices' 686/PIP REIE 686 - First Edition may be obtained from

America Petroleum Institute
1220 L Street, N.W.
Washington, D.C. 20005.
Telephone: (202) 682-8000.

4.1 Location

Install the unit close to the source of the liquid to be pumped.

Ex Equipment operated in hazardous locations must comply with the relevant explosion protection regulations. See section 1.6.4, *Products used in potentially explosive atmospheres.*

When selecting the location, be sure to allow adequate space for operation as well as for maintenance operations involving dismantling and inspections of parts.

Headroom is an important consideration as an overhead lift of some type is required.

4.2 Foundation

Note: The following information regarding foundation is only offered as a general guideline. Flowserve requires that all foundations be designed and installed in accordance with specifications set forth in Chapter 4, *Foundations* from API Recommended Practices 686/PIP REIE 686, First Edition.

The design of foundation is not the responsibility of Flowserve. It is therefore recommended that the customer consult a competent specialist skilled in the field of foundations, to insure proper design/installation of the foundation.

The foundation should be properly prepared according to the planned grouting method. See 4.3 Grouting for details.

The foundation should be rigid and substantial to support the baseplate at all points to prevent any pump vibration and to permanently.

The most satisfactory foundations are made of reinforced concrete. These should be poured well in advance of the installation to allow proper time for drying and curing.

The General Arrangement Drawing will show required anchor bolt locations and size of bolts.

Allow a little more than the specified threaded bolt length above the rail of the baseplate. The excess can always be cut off if it is not needed.

A clean rough-finish top surface is required when applying grout.

4.2.1 Installation check list

a) Level Baseplate.

b) Preliminary Alignment.

c) Grout Baseplate - Check Foundation Bolts

d) Alignment Shaft/Coupling.

e) Piping installed – correct vent, gauge, valve, suction strainer and pipe support locations?

f) Check Coupling Alignment.

g) Coupling guard correctly installed?

4.2.2 Level the baseplate

Note: The following information regarding leveling of equipment is only offered as a general guideline. Flowserve requires that all leveling of equipment be performed in accordance with specifications set forth in Chapter 5, *Mounting Plate Grouting* from API Recommended Practices 686/PIP REIE 686, First Edition.

Before putting the unit on the foundation, thoroughly clean the top of the foundation. Break off any loose pieces of cement and roughen the top with a chisel to afford a good hold for grout.

Note: When lifting baseplate with pump, sling baseplate from all lifting eyes provided. Failure to do

this may result in permanent deformation of baseplate.

Note: Pump, driver auxiliary equipment and piping shall be removed from the baseplate before leveling the baseplate.

Locate the baseplate in its proper position on the concrete block together with the leveling screws as shown in the General Arrangement Drawing.

Using a precision level across the machined surfaces of the pump and driver mounting pads, adjust leveling screws as necessary to ensure that baseplate is leveled in all directions.

When the baseplate is leveled, snug the foundation bolts, but do not completely tighten.

4.2.3 Preliminary alignment

Using the previous procedure, adjust baseplate until pump and driver are within 0.076 mm (0.003 in.).

4.3 Grouting

Note: The following information regarding grouting is only offered as a general guideline. Flowserve requires that all grouting be installed in accordance with specifications set forth in Chapter 5, *Mounting Plate Grouting* from API Recommended Practices 686/PIP REIE 686, First Edition. Refer to *API 610 - Eighth Edition - Appendix `L`* for baseplate grouting requirements. It is recommended that the customer consult a competent specialist skilled in the field of grouting, to insure the proper installation of all grouting.

The following ASTM Specifications are furnished as references for test methods used in conjunction with installation of grouting materials and should be used to obtain proper results:

ASTM C 78-84, *Test Method for Flexural Strength for Concrete*

ASTM C 109-90, *Test Method for Compressive Strength of Hydraulic Cement Mortars – Modified*

ASTM C 469-87a, *Test Method for Static Modulus of Elasticity and Poisson's Ratio of Concrete in Compression*

ASTM C 496-90, *Test Method for Splitting Tensile Strength of Cylindrical Concrete Specimens*

ASTM C 531-85, *Test Method for Linear Shrinkage and Coefficient of Thermal Expansion of Chemical Resistant Grouts and Monolithic Surfacing - Modified*

ASTM C 666-90, *Test Method for Resistance of Concrete to Rapid Freezing and Thawing*

ASTM C 939-87, *Test Method for Flow of Grout for Preplaced Aggregate Concrete (Flow Cone Method)*

ASTM C 942-86, *Test Method for Compressive Strength of Grouts for Preplaced Aggregate Concrete in the Laboratory*

ASTM C 1090-88, *Test Method for Measuring Changes in Height of Cylindrical Specimens from Hydraulic Cement Grout*

ASTM C 1107-91, *Standard Specification for Packaged Hydraulic-Cement Grout (Non-Shrink)*

(CRD-C 621-92), ACI 351, *Grouting for Support of Equipment and Machinery*

24-Hour Test, *MBT Test Method for Grout Performance*

Note: Minimum requirements for epoxy grout (typical properties at 23 ^{o}C (73 ^{o}F))

ASTM D-635, *Fire Resistant*

ASTM C-579B, *Minimum Compressive Strength – 12000 psi*

ASTM C-827, *Height Change @ 38 ^{o}C (100 ^{o}F) – Positive – Effective Bearing Area – 95%*

ASTM C-1181, *Maximum Creep in 1 Year – 1.6X10^{-3} in./in. at 140 ^{o}F, 400 psi*

ASTM C-307, *Minimum Tensile Strength – 12.4 Mpa (1800 psi)*

ASTM C-580, *Minimum Flexural Strength – 26.2 Mpa (3800 psi)*

ASTM C-580, *Minimum Flexural Secant Modulus – 1.2X10^{4} Mpa (1.8X10^{6} psi)*

ASTM C-531, *Maximum Coefficient of Expansion – 17X10^{-6} in./in./^{o}F. Maximum Peak Exotherm 1000 g (35.27 oz.) insulated – 35 ^{o}C (95 ^{o}F). Full Aggregate Must Be Used.*

4.3.1 Grouting material

4.3.1.1 Normal grout material

A quality, high strength, non-shrink cementatious grout material shall be used for installation. Epoxy is preferred.

4.3.1.2 Layered grout material

A layered combination of non-shrink cementatious grout and normal industrial concrete can be used. See sketch below for example.

a) The first layer shall be 25 – 50 mm plus a layer of 30 - 40 mm of normal grout material as described in 4.3.1.1.
b) The second layer is normal industrial concrete poured to a level that is approximately 30-40 mm from the top of the baseplate decking.

c) The top layer is 30-40 mm normal grout material as described in 4.3.1.1.

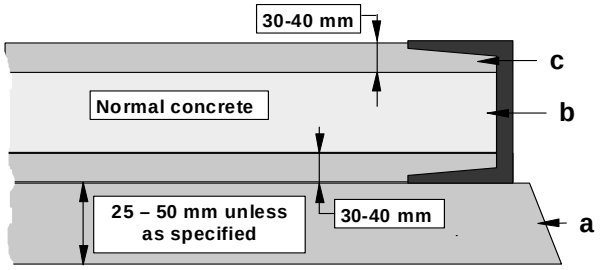

4.3.2 Grouting method A

a) Prepare the foundation properly as specified in sketches below.

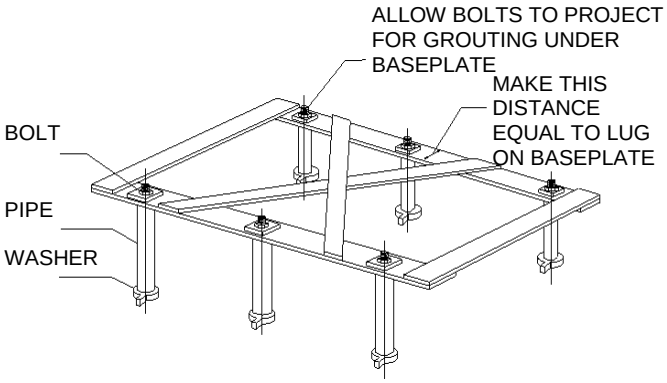

Template for hanging foundation bolts

The sketch illustrates a recommended foundation bolt arrangement. Notice the large washer with lugs at the bottom. It should be welded to the bolt and pipe sleeve to prevent turning.

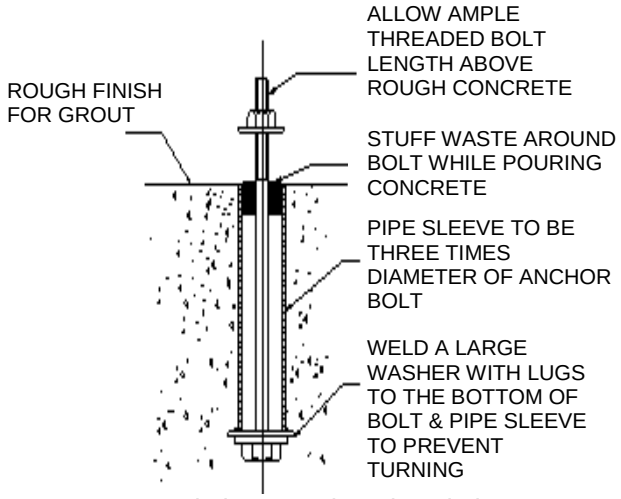

Foundation complete description

b) Build a dam around the foundation to contain grout materials.

CAUTION Before grouting, check level of machined pads of baseplate in both directions and perform a rough shaft/coupling alignment. Alignment after grout has set will not be possible if above is not satisfactorily completed.

c) Grout leveling space and baseplate as per manufacturer's instructions.

Holes are provided in the baseplate to permit pouring the grout and distributing. Vent holes are also provided in each compartment. Fill under the baseplate completely, stirring to assure proper distribution of the grout. Check to see that the grout flows under the edges of the baseplate evenly.

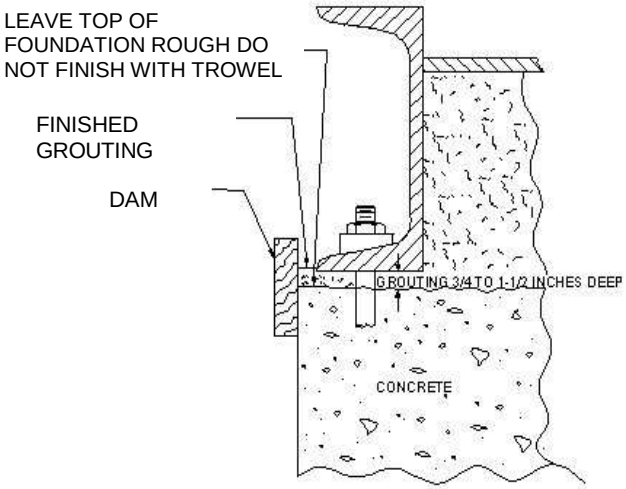

Building dam around the foundation before pouring grout

Note: Pour grout until level reaches top of dam. Allow drying sufficiently to prevent grout from overflowing while completing the remaining grouting.

Note: Do not vibrate baseplate when grouting; make sure baseplate is vented properly and all areas indicated on General Arrangement drawing are thoroughly filled to prevent any resonant problems.

d) When the grout is thoroughly hardened, remove the dam.

e) Completely tighten the foundation bolts.

4.3.3 Grouting method B

a) Prepare foundation properly as shown in the General Arrangement Drawing. The bolt holes shall be tapered to the top.

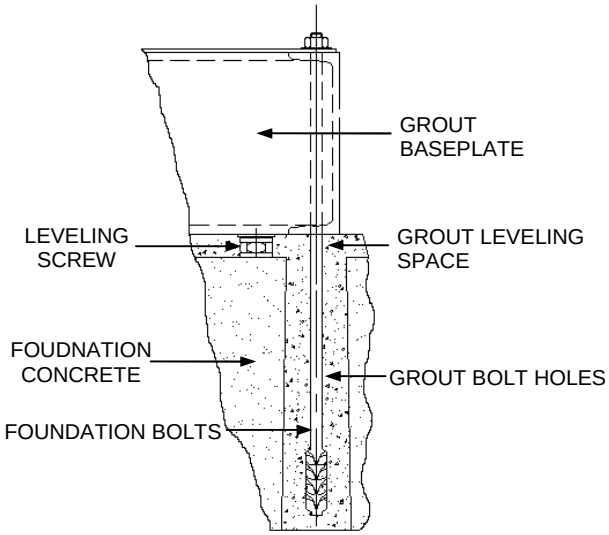

Foundation and grouting description

b) Build a dam around the foundation to contain grout materials.

c) Grout the foundation bolt holes as per manufacturer's instructions, ensure that the grout fills all open space and eliminates all air pockets.

CAUTION Before grouting leveling space and baseplate, check level of machined pads of baseplate in both directions and perform a rough shaft/coupling alignment. Alignment after grout has set will not be possible if above is not satisfactorily completed.

d) Grout leveling space and baseplate as per manufacturer's instructions.

Holes are provided in the baseplate to permit pouring the grout and distributing. Vent holes are also provided in each compartment. Fill under the baseplate completely, stirring to assure proper distribution of the grout. Check to see that the grout flows under the edges of the baseplate evenly.

Note: Pour grout until level reaches top of dam. Allow drying sufficiently to prevent grout from overflowing while completing the remaining grouting.

Note: Do not vibrate baseplate when grouting; make sure baseplate is vented properly and all areas indicated on General Arrangement drawing are thoroughly filled to prevent any resonant problems.

e) When the grout is thoroughly hardened, remove the dam.

f) Completely tightened the foundation bolts.

4.4 Initial alignment

4.4.1 Shaft/coupling alignment

Note: The following information regarding shaft alignment is only offered as a general guideline. Flowserve requires that all shaft alignment be performed in accordance with specifications set forth in Chapter 7, *Shaft Alignment* from API Recommended Practices 686/PIP REIE 686, First Edition.

CAUTION Shaft alignment must be correct for successful operation. Rapid wear, noise, vibration and actual damage to the equipment may be caused by shaft misalignment. The shafts must be aligned within the limits given within this section.

Note: Adjustment to correct the alignment in one direction may alter the alignment in another direction. Always check in all directions after making any adjustment.

Coupled equipment must be aligned to minimize unnecessary stresses in shafts, bearings and coupling. Flexible couplings will not compensate for appreciable misalignment. Foundation settling, thermal expansion or nozzle loads resulting in baseplate/foundation deflection and vibration during

operation may require the full coupling misalignment capability.

4.4.1.1 **Types of misalignment**
There are two types of shaft misalignment: Angular and offset. Both types of misalignment can occur in horizontal and vertical planes and are present in most applications.

In angular misalignment, the centerline of the shafts intersects, but is not on the same axis.

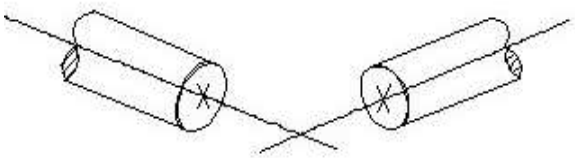

Angular misalignment

In offset misalignment, the shaft centerlines are parallel but do not intersect.

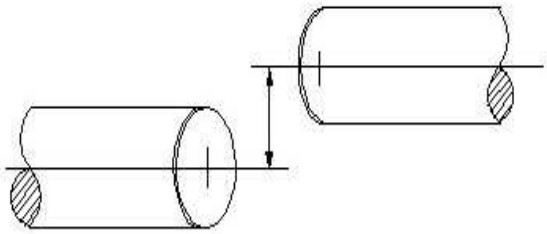

Offset misalignment

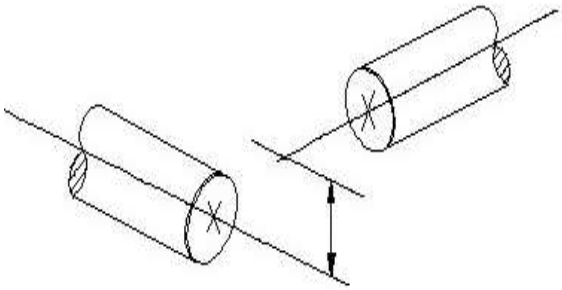

Combined misalignment

4.4.1.2 **Alignment methods**
The following methods may be used to align equipment train. The methods a) and b) are dial indicator based.

a) Rim and face alignment

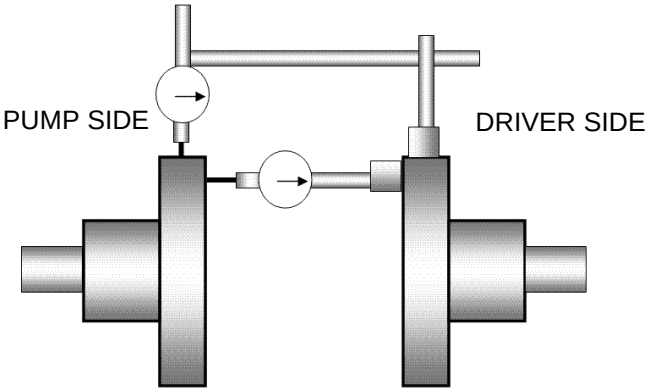

Rim and face alignment

b) Reverse rim indicator alignment

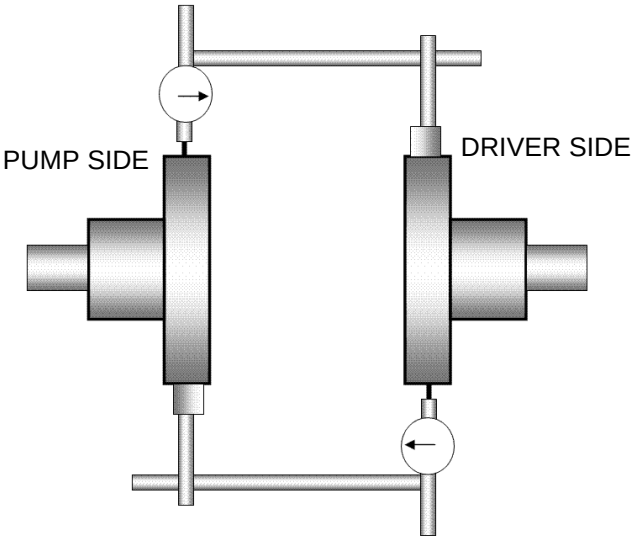

Reverse rim indicator alignment

c) Laser alignment.

4.4.2 Dial-indicator-based alignment
4.4.2.1 Check soft foot
Soft foot can affect the alignment readings and should be checked first and eliminated on both pump and driver.

a) Tighten hold down bolts.

b) Set a dial indicator on one foot, loosen the bolt and check if there is a indicator reading. If so place a shim with the same thickness as the displacement.

c) Check and adjust all feet.

4.4.2.2 Set DBSE

The shaft gap, or distance between shaft ends (DBSE), must be in accordance with the certified General Arrangement Drawing and must be measured with pump and driver shafts in the center of their axial end float. Motor with sleeve bearings is to be aligned with rotor at magnetic center.

Move driver to insure proper gap distance.

Note: It is recommended that the pump hold-down bolting be torqued before taking any alignment measurements. This makes the pump the fixed machine and the driver the movable machine. In certain cases, however, it may be impractical to move the driver; therefore, the pump may have to be moved.

4.4.2.3 Determine bracket sag

Bracket sag must be determined and included in the alignment calculation.

a) Install clip with extension pieces and dial indicator(s).

b) Place indicator on top and reset to zero, turn 180° and read indicator and register.

c) Record sag reading obtained at the bottom.

d) Side to side readings need not to be corrected as the sag is equal on both sides.

4.4.2.4 Determine misalignment and correct vertical plane

Before moving the equipment vertically, it is important that the vertical thermal expansion be taken into consideration. Refer to *General Arrangement Drawing notes* and/or driver instructions for recommended cold vertical setting (if thermal expansion is a factor).

The shims between the motor feet and mounting surface should be clean and dry. This is especially critical for equipment that has been in service for some time and need to be realigned. Water, dirt and rust may change the height of the shim pack over a period of time. Shims should be made large enough to support the weight of the motor on its mounting foot. Do not use many thin shims, as this may result in a spongy mounting.

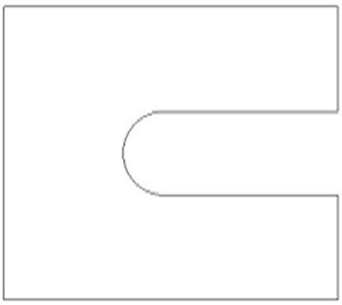

Recommended shim design

Move the equipment vertically by adding or removing the calculated thickness of shims. Torque equipment hold-down bolting to required values.

4.4.2.5 Determine misalignment and correct horizontal plane

The dial indicators shown below are required to accurately measure the move in the horizontal direction. Move the driver by bumping with soft hammer/mallet or using the jack-screws (if provided). The amount of horizontal relocation required is calculated in alignment data sheet.

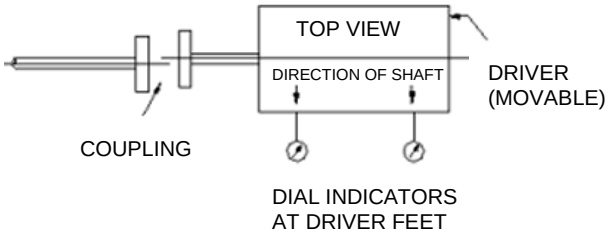

Dial indicators configuration

Note: It is recommended, the completed alignment document be retained as part of your permanent maintenance file.

4.4.3 Laser alignment

The use of laser alignment greatly simplifies the alignment process. Because of equipment and software differences, this will only describe laser alignment in general steps.

a) Prior to alignment process the baseplate must be leveled.

b) Check for soft foot condition. Uneven base height, dirty or corroded foot or other irregularities

c) Rough align the pump and motor shafts with a straight edge.

d) Mount the laser emitter on the pump shaft, and the laser target on the motor shaft.

e) Link the shaft ends so they rotate together.

f) Adjust shim stack heights for vertical parallelism and angular alignment per laser unit's output. Make the necessary corrections by adding or by removing shims at the motor feet.

g) Adjust the motor position sideways for horizontal and angular alignment per the laser unit's output by using a soft mallet or adjusting screws.

h) Tighten all pump and motor feet fasteners.

i) Verify the final alignment

4.4.4 Check coupling alignment

The angular and offset coupling alignment must be rechecked.

a) Coupling faces are to be parallel within 0.0254 mm (0.001 in.) TIR.

b) Coupling outside diameters is to be aligned within 0.0762 mm (0.003 in.) TIR.

c) Motor-Driven: "Bump" the motor and check motor rotation.

d) Turbine-Driven: Check turbine rotation. (If wrong, consult turbine manufacturer.)

4.4.5 Assemble coupling

a) Assemble coupling per the manufacturer's instructions included in Section 8 of this manual.

b) Install coupling guard.

4.4.6 Dowel pump and driver

a) Cold Pumps (temperature below 93 ℃ (200 ℉))

Pump hold down bolts are to be torqued to the proper value and dowel pins put in two diagonally opposite feet.

b) Hot Pumps

Pumps handling liquids at temperatures of 94 ℃ (200 ℉) and over are designed to permit the casing to expand with temperature away from coupling end of pump. The units that come under this classification must have the pump support feet dowelled to the pedestal at the coupling end. This maintains the coupling gap at the desired amount.

The pump feet at the opposite end are held from moving vertically by the use of a self-locking nut. The clearance between the base of the nut and the top of the pump foot should be 0.051 mm (0.002 in.).

A "Gib Block" running parallel to the length of the pump foot at each of the outboard feet controls the horizontal movement. The "Gib Blocks" are bolted and doweled to the pedestal. A 0.254 mm (0.010 in.) gap is maintained between the "Gib Block" and pump foot.

⚠ ***The self-locking nuts, which hold the pump from moving in a vertical motion, are clamped tight to the pump foot at time of shipment. The 0.051 mm (0.002 in.) clearance must be established at time of installation.***

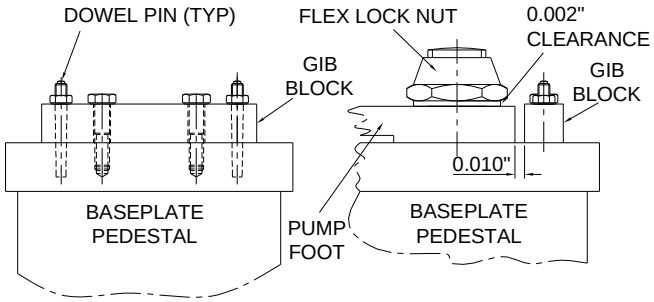

Gib block installation sketch for hot pump

c) Pump Driver

Refer to General Arrangement Drawing and/or driver instructions for doweling information.

4.4.7 Gib block installation for hot applications

Gib blocks are installed to control the direction of the growth while maintaining pump-driver coupling alignment. They are installed after baseplate has been leveled and grouted, suction and discharge piping connected, and final shaft coupling alignment is completed.

Gib blocks are shipped loose and field installed at the site. The following procedure must be followed for correct installation of gib blocks.

a) Fully torque the hold-down bolts in the driver end of pumps feet to torque values listed in the instruction manual (refer to *Sectional Assembly Drawing* in section 8).

b) Install the dowel pins in the pump drive end foot by drilling the foot and the baseplate for the tapered dowel provided.

c) Position the gib blocks to obtain a 0.254 mm (0.010 in.) clearance between the gib block and the side of the non-drive end pump foot as noted on the attached figure. Drill and tap the cap screw holes for the gib blocks.

d) Tighten the hold-down bolts for the gib blocks.

e) Install the dowel pins in the gib blocks by reaming the block and baseplate for the tapered dowel provided.

f) Tighten the hold-down locknuts on the non-drive end pump feet to establish a 0.051 mm (0.002 in.) gap between the locknut and the pump foot.

4.4.8 Hot alignment check

A hot check can only be made after the unit has been in operation a sufficient length of time to assume its NORMAL operating temperature and conditions. If the unit has been correctly cold set, the offset misalignment will be within 0.076 mm (0.003 in.) TIR and the angular misalignment will be within 0.0254 mm (0.001 in.) TIR when in operation. If not, make adjustments.

⚠ ***Do not attempt any maintenance, inspection, repair or cleaning in the vicinity of rotating equipment. Such action could result in injury to operating personnel.***

⚠ ***Before attempting any inspection or repair on the pump the driver controls must be in the "off" position, locked and tagged to prevent restarting equipment and injury to personnel performing service on the pump.***

4.5 Piping

⚠ CAUTION The following information regarding piping is only offered as a general guideline to the customer. Flowserve requires that all piping and related systems be designed/installed in accordance with specifications set forth in Chapter 6, *Piping* from API recommended practices 686/PIP REIE 686, First Edition.

The design of piping, and related systems, is not the responsibility of Flowserve. It is therefore recommended that the customer consult a competent specialist skilled in the field of piping, to insure proper design/installation of all piping.

4.5.1 Suction and discharge piping

These units are furnished for a particular service condition. Changes in the hydraulic system may affect performance adversely. This is especially true if the changes reduce the pressure at the suction or if the liquid temperature is increased. In case of any doubt contact the nearest Flowserve Office.

Suction and discharge piping should be of ample size, be installed in direct runs, and have a minimum of bends. Eccentric reducer shall be flat on top (FOT).

It is desirable to have at least seven (7) diameter of straight pipe between the first elbow and the pump suction. Elbow in the piping to the pump's suction nozzle should be of the long radius type.

Seven (7) diameters of straight pipe should be used between two elbows in series and the pump suction.

Elbows in more than one plane should not be used without splitters.

Splitters are placed in the elbow in the mean radius line perpendicular to the plane of the elbow.

⚠ CAUTION Provision must be made to support piping external to the pump to prevent excessive nozzle loads, maintain pump/driver alignment and avoid pipe- induced vibrations.

Install a check valve and a gate valve in the discharge pipe of the pump. When the pump is stopped, the check valve will protect the pump against excessive pressure and will prevent the pump from running backward. The check valve should be installed between the gate valve and the pump nozzle in order to permit its inspection. The gate valve is also useful in priming and starting the pump.

Keep the suction pipe short and direct. Use a suction pipe equal to or one size larger than the pump suction nozzle. Keep the suction pipe free of all air pockets.

Note: A spool piece should be installed in suction line so that the suction screen may be installed and removed.

CAUTION Operation at low flows results in pump power heating the liquid. A bypass may be required to prevent vaporization and subsequent pump damage. Mechanical damage may result from continuous operation at flows less the minimum flow of design operating point (see 10.4 *Customer Data Sheet*).

When pump is equipped with manifolded vent and drain lines, each line must be equipped with an individual valve to prevent any liquid from a high pressure line flowing into a low pressure line. These valves must be kept in the closed position during pump operation.

4.5.2 Suction strainer

In a new installation, great care should be taken to prevent dirt, scale and welding beads from entering the pump. Even when piping has been previously flushed, it is difficult to break loose the oxides and mill scale, which will become free when the pipe heats and cools several times. Numerous close running clearances within the pump are vulnerable to abrasive matter present in new piping. Foreign material may be large enough, or of sufficient volume, to jam a pump, with probable damage to both pump and drive equipment. Smaller size material passing through the pump can cause rapid pump wear and premature pump failure.

This pump is provided with the assumption that it will be pumping clean liquids (unless otherwise stated in the order and addressed in the proposal). Flowserve pumps are provided with running clearances ranging typically from 0.12 mm (0.005 in.) to 0.80 mm (0.030 in.), depending on the service and the pump size. It is impractical to install a suction strainer to remove particulate of this size. Such particles will normally pass through the pump without causing damage, provided the concentrations are minor.

The possibility exists that, on shutdown of the pump, such particles can become trapped in the close running clearances during coastdown, causing binding. Flowserve cannot recommend a procedure that will totally prevent such binding; however, we strongly suggest that systems be cleaned and thoroughly flushed prior to connecting the pump to the piping to minimize particles entering the pump. Starting and stopping of the pump should be MINIMIZED, as pumps are most susceptible to dirt during starts and stops.

In the event that binding on coastdown occurs, it is unlikely that the binding can be remedied by hand rolling the rotor, and partial disassembly may be required to clean the affected parts. It should be noted that increased particle concentrations increase the probability of coastdown binding and seizures, as well as erosion damage.

CAUTION Excessive force used to try to free a bound rotor may cause damage beyond minor clean-up and repair of rotor parts.

Generally, a pump should not be installed without start-up strainer protection. The suction piping should be thoroughly flushed before installing the suction strainer and connecting the suction piping to the pump. The strainer should be installed in the inlet piping near the pump, making certain that it is located where it may be readily serviced (cleaned). Be sure, however, that the installed strainer will not distort the flow to the pump suction nozzle.

Do not install the strainer directly on the pump suction nozzle. For a cone-type strainer, the down-stream end of the cone should be no closer than four (4) pipe diameters from the pump suction nozzle. Basket-type strainers typically introduce greater flow disturbances and should be installed at least six (6) pipe diameters from the pump suction nozzle.

The Flowserve standard for suction strainers consists of conical-shaped steel plate with 1/8 in. perforations see the below picture. The open area of the strainer should be a minimum of three times the area of the pump suction.

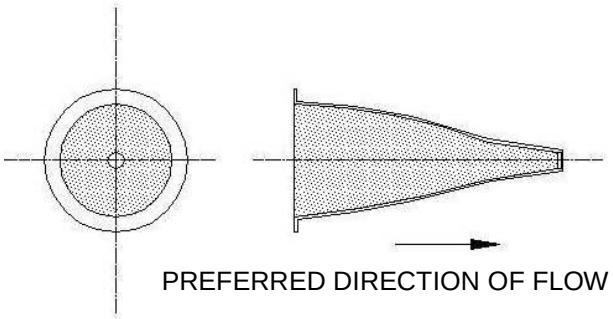

At all times when using suction strainers, it is critical that the pressure drop across the strainer be constantly monitored to ensure that the pump suction

pressure does not fall below that required to prevent pump cavitation. Pressure (or vacuum) gauges should be installed on both sides of the strainer so that the pressure drop across the strainer can be monitored. During start-up of the system, the gauges should be monitored continuously. Consult the plant engineer or system designer for the allowable pressure differential across the strainer prior to operating the pump. Pressure differential across the strainer and/or screen is typically no more than 2 – 3 psig. An increase in the differential pressure between the two gauges indicates that the strainer or screen is becoming clogged with dirt and scale. Before the pressure drop becomes so severe that cavitation occurs, the pump should be shut down and the strainer cleaned. Alarm settings to protect the pump from damaging cavitation and loss of suction need to be supplied by the plant engineer or system designer prior to operating the pump. Typical alarm settings to protect the pump from damaging cavitation and loss of suction would be 5 psig differential pressures across the strainer (screen). The suction piping should be arranged such that the ultimate strainer configuration (location) allows ready access for cleaning.

The strainer may be fitted with a finer screen to filter the inlet flow. When this is done, 40 mesh screens is typically used for start-up operation, at reduced flow rates. For final operation in a closed system, the suction strainers are normally removed after the system is cleaned. For critical pump applications, where continuous screening of suction flow is desirable, and in open systems, 20-mesh screening is typically used for permanent strainers. At all times, when using screens and suction strainers, it is critical that pressure drop across the screen and/or strainer be constantly monitored to ensure that the pump suction pressure does not fall below that required to prevent cavitation.

When dirt and scale have been removed from the system, as indicated by no further change in pressure drop across the strainer with time, the start-up strainer may be removed or the screen may be replaced with one having larger openings. If a permanent strainer will be used during normal operation, the pressure differential needs to be monitored on a continuous basis.

If a permanent strainer is not used, the start-up strainer needs to be temporarily reinstalled whenever the system is opened up for repair or routine maintenance. As long as a suction strainer or screen remains in place, the differential pressure should be monitored on a regular basis.

CAUTION The pressure drop across the strainer is a direct reduction in the NPSH available to the pump. NPSH available must always exceed the NPSH required by the pump. This requirement may limit the pump flow rate, particularly during start-up operation. Alarms or automatic pump shutdown devices should be installed to minimize the possibility of pump damage. It is the responsibility of the pump operator to obtain the allowable pressure drop across the strainer for safe pump operation from the plant engineer or system designer prior to operation of the pump.

4.5.3 Coupling alignment check

Refer to section entitled *shaft/coupling alignment* and perform a coupling alignment check as outlined. This check is recommended to insure the alignment has not been disturbed during installing suction and discharge piping.

4.6 Electrical connections

DANGER ***Electrical connections must be made by a qualified Electrician in accordance with relevant local national and international regulations***.

Ex It is important to be aware of the EUROPEAN DIRECTIVE on potentially explosive areas where compliance with IEC60079-14 is an additional requirement for making electrical connections.

It is important to be aware of the EUROPEAN DIRECTIVE on electromagnetic compatibility when wiring up and installing equipment on site. Attention must be paid to ensure that the techniques used during wiring/installation do not increase electromagnetic emissions or decrease the electromagnetic immunity of the equipment, wiring or any connected devices. If in any doubt contact Flowserve for advice.

DANGER ***The motor must be wired up in accordance with the motor manufacturer's instructions (normally supplied within the terminal box) including any temperature, earth leakage, current and other protective devices as appropriate.***

The identification nameplate should be checked to ensure the power supply is appropriate.

A device to provide emergency stopping must be fitted.

If pre-wired is not supplied to the pump unit, the controller/starter electrical details will also be supplied within the controller/starter.

For electrical details on pump sets with controllers see the separate wiring diagram.

CAUTION Direction of rotation has to be checked with pump uncoupled.

4.7 Final shaft alignment check

After connecting piping to the pump, rotate the shaft several times by hand to ensure there is no binding and all parts are free.

Recheck the coupling alignment, as previously described, to ensure no pipe strain. If pipe strain exists, correct piping.

CAUTION Refer to section entitled *shaft/coupling alignment* and perform a coupling alignment check as outlined. This check is recommended to insure the alignment has not been disturbed during the grouting of the baseplate or while installing suction and discharge piping.

4.8 Protection systems

The following protection systems are recommended particularly if the pump is installed in a potentially explosive area or is handling a hazardous liquid. If in doubt consult Flowserve.

If there is any possibility of the system allowing the pump to run against a closed valve or below minimum continuous safe flow a protection device should be installed to ensure the temperature of the liquid does not rise to an unsafe level.

If there are any circumstances in which the system can allow the pump to run dry, or start up empty, a power monitor should be fitted to stop the pump or prevent it from being started. This is particularly relevant if the pump is handling a flammable liquid.

If leakage of product from the pump or its associated sealing system can cause a hazard it is recommended that an appropriate leakage detection system be installed.

To prevent excessive surface temperatures at bearings it is recommended that temperature or vibration monitoring are carried out.

5 COMMISSIONING, START-UP, OPERATION AND SHUTDOWN

Note: Commissioning of all equipment must be performed in accordance with specifications set forth in Chapter 9, *Commissioning* from API Recommended Practices 686/PIP REIE 686, First Edition.

CAUTION ***These operations must be carried out by fully qualified personnel.***

5.1 Precommissioning procedure

a) Never operate the pump with suction valve closed.

b) Never operate pump unless it is filled with liquid and vented.

c) Never operate the pump unless a liquid source is available.

d) Never operate the pump without proper lubrication.

5.1.1 Pre-operational checks

At initial start-up and after the equipment has been overhauled:

a) Ensure pump and piping are clean. Before putting the pump into operation, it should be thoroughly flushed to remove the rust preventive as well as any foreign matter, which may have accumulated during installation.

   Isolate the pump from pipe work, flush out the pipe work then flush the pump. This operation must be carried out thoroughly because the pump contains many close running clearances, which will be damaged by dirt particles. Take all possible care not to contaminate your system.

b) Clean and flush bearing housings and lubrication system. *(see pump lubricants).*

c) Turn rotor by hand or with strap to make sure it turns freely.

d) Ensure that the mechanical seal is properly assembled and tightened.

CAUTION Most cartridge seals are equipped with a spacer between the gland plate and drive collar. This spacer must be removed before starting unit.

e) Ensure coupling is properly aligned and lubricated; and pump and driver are properly doweled. (Refer to *shaft /coupling alignment* procedure).

f) Ensure coupling guard is in place.

g) Check torque of all bolting and plugs for tightness.

5.1.2 Pump instrumentation set points

The following set points apply to DMX Pumps, which use the sleeve/KTB bearing arrangement.

a) Bearing metal temperature
   - Normal 60 °C to 82 °C (140 °F to 180 °F)
   - Alarm 85 °C (190 °F)
   - Shutdown 90 °C (200 °F)

b) Bearing housing vibration
   - Normal 2.5 to 7.6 mm/s (0.1 to 0.3 in./sec)
   - Alarm 10.2 mm/s (0.4 in./sec)
   - Shutdown 12.7 mm/s (0.5 in./sec)

c) Radial shaft vibration
   - Normal 0.025 to 0.050 mm (1 to 2 mils)
   - Alarm 0.076 mm (3 mils)
   - Shutdown 0.102 mm (4 mils)

5.1.3 Initial start up procedure

a) Close discharge valve if a bypass system is used. If not, crack open the discharge valve.

b) Prepare the driver for start-up in accordance with the manufacturer's instructions.

c) Warm-up pump (if required).

Avoid severe thermal shocks to the pump as a result of sudden liquid temperature changes. The pump must be preheated prior to start-up. Unless otherwise specified, the external temperature of the casing must be within 55.6 °C (100 °F) of the temperature of the liquid to be pumped at time of start-up.

CAUTION Pump temperature stratification could occur. A maximum temperature delta of 28 °C (50 °F) between the upper and lower case shall be checked prior to starting the pump.

Due to the heavy metal sections, the casing will lag the liquid temperature during such changes, and severe temperature stresses and subsequent misalignment of machined fits may result. Pre-heating is accomplished by circulating a small amount of hot fluid through the casing by utilizing vents, drains or bypass from discharge and suction. Preheat pump slowly at a rate not to exceed 55.6 ℃ (100 ℉) per hour.

d) Prime pump and ensure pump suction valve and bypass isolating valve are open.

CAUTION Before starting or while operating the pump, the casing and suction line must be completely filled with the liquid being pumped. The rotating parts depend on this liquid for lubrication, and the pump may seize if operated without liquid.

e) Ensure pump recirculating line (if provided) is open and free of obstructions.

f) Check that pump is vented by observing leakage from casing vent and seal piping vent. Close vent when liquid is emitted.

g) Make sure seal piping is turned on.

h) Prepare the driver for start-up in accordance with the manufacturer's instructions.

i) Check pump rotation by starting unit momentarily. The direction of rotation is shown on *10-4, pump data sheet*. Note the pump coasts to a gradual stop.

CAUTION If pump stops abruptly when driver is shut down, investigate for pump binding. Take necessary remedial action before resuming operation.

j) Starting the driver (motor driven).

k) Starting the driver (turbine driven).

Start the turbine and bring it up to speed quickly.

l) As soon as the pump is up to rated speed, open discharge valve. This will avoid abrupt changes in velocity and prevent surging in the suction line.

5.2 Pump lubricants

CAUTION **Operation of the unit without proper lubrication can result in overheating of the bearings, bearing failures, pump seizures and actual breakup of the equipment, exposing operating personnel to injury.**

Oil is supplied to the pressure lubrication system by one of the two oil pumps. The main oil pump is mounted on a support head which is bolted to the thrust end bearing body and cap and is driven by the main pump shaft via a coupling.

An auxiliary oil pump is furnished to supply oil to the pressure lubrication system to be used as a minimum for start up, shut down or periods when the main oil pump can not supply sufficient oil. Whilst the operational logic of the system is outside the scope of this section refer to the lube system control panel manufacturer for actual logic. It is a requirement to have oil supplied to the bearings prior to running the machine i.e. start the auxiliary oil pump prior to start up of the main train, and for shut down of main machine or indeed at any time the main oil pump fails to deliver sufficient quantity of oil.

During operation, oil is taken from the oil reservoir by the pump and is directed through the oil filter and is then supplied to the pump/drive bearings. A back pressure relief valve mounted in the lubrication system maintains the required system oil pressure. The system is additionally equipped with a low pressure, pressure switches, which can be used to control the unit when the oil pressure in the lubrication system decreases to predetermined values or prevents the starting of the unit until adequate oil pressure is established. A gravity assisted, sloped oil return line conducts the oil from the pump/driver bearings back to the system reservoir.

A check valve is mounted in the auxiliary oil pump discharge line to prevent oil from returning to the oil reservoir when the main oil pump is running and the auxiliary oil pump is shut down.

5.2.1 Lubricating oil

Oil requires frequent replenishment at normal operating temperatures and very frequent replenishment at elevated operating temperatures. Oil is always subject to gradual deterioration from use and contamination from dirt and moisture. This deterioration and contamination will, in time, be harmful to the bearing and cause premature wear. For this reason, oil should be checked for contamination and deterioration regularly.

The frequency of oil change depends on the operating conditions and the quality of the lubricant. Oil should be checked for deterioration and contamination weekly during periods of operation.

The following guideline is based on the Cleanliness Code described in ISO 4406-1999.

Oil Cleanliness Values		
Intervals	ISO 4406 Cleanliness Code	
	R6µm	R14µm
During Factory Tests	20	18
First 100 hours of Field Operation	20	18
Every 2000 hours of Field Operation	19	17

Note: The listed oil cleanliness values are for reference only. Deviations from the listed values should be communicated to Flowserve for evaluation.

Mineral oils oxidize and should be replaced at intervals described in the table below.

5.2.2 Oil specifications

Straight mineral oils without additives are generally preferred for bearing lubrication. It should preferably be of the turbine type and not contain free acid, chlorine, sulfur or more than a trace of free alkali. Quality mineral oils with a minimum Viscosity Index (VI) of 95 is recommended.

An ISO Viscosity Grade (VG) Number identifies lubricating oils. The VG Number is the viscosity of the oil at 40 ℃. (104 ℉.) in centistokes, see table b elow.

In the majority of instances, a turbine oil with a VG Number of 46 (nominally equivalent to SAE 20) will meet rolling element bearing lubrication requirements (see *oil temperature*).

CAUTION Lubricant must be compatible with all parts requiring lubrication.

Oil replacement interval			
Typical Oil Operating Temperature	Operating Cycle	Oil Change Interval	Notes
Ambient	Stand by	6 calendar months	
Ambient – 71 °C (Ambient to 160 °F)	Continuous	3 calendar months	Longer intervals between replacements may be possible at these operating temperatures, but 3 month intervals are recommended to protect against normal oxidation, contamination, and deterioration. Regular oil monitoring can inform this decision.
71 °C – 82 °C (160 °F – 180 °F)	Continuous	3 calendar months	3 month intervals are recommended to protect against normal oxidation, contamination, and deterioration.
> 82 °C (> 180 °F)	Continuous	As specified by Flowserve	Continuous operation at oil temperatures above 82 °C (180 °F) requires consultation with Flowserve.

Oil specifications and characteristics		
Oil Characteristics	Operating Oil Temperature	
	16 °C - 38 °C (60 °C -100 °F)	38 °C - 82 °C (101 °F -180 °F).
Saybolt Viscosity (SSU) 38 °C (100 °F)	158 Seconds	215 Seconds
Pour Point	-7 °C (20 °F)	-7 °C (20 °F)
Flash Point	204 °C (400 °F)	204 °C (400 °F)
Recommended ISO Viscosity Grade (VG) Number	32	46

5.2.3 Oil temperature

Oil temperature should be maintained between 16 °C (60 °F) and 82 °C (180 °F).

CAUTION The minimum bearing oil temperature is 16 °C (60 °F). If necessary, prior to startup, one of the following procedures should be employed:

a) Drain the oil in the bearing housing(s) and replace with warm oil.

b) Heat the bearing housing(s) using heat tape (or other suitable means).

c) Circulate warm liquid through the cooling jacket or immersion cooler (if supplied).

d) Utilize oil with a lower viscosity, or VG number, or consider using a synthetics hydrocarbon oil with

a low pour point to give a viscosity similar to that of ISO 46 (for maximum oil operating temperatures of 180 ℉) or ISO 32 (for maximum oil operating temperatures of 120 ℉).

Note: ISO 46 is recommended for continuous operating oil temperatures between 38 ℃ (100 ℉) and 82 ℃ (180 ℉), with a minimum startup temperature of 16 ℃ (60 ℉); ISO 32 may be considered for continuous operating oil temperatures between 16 ℃ (60 ℉) and 49 ℃ (120 ℉), with a minimum start up temperature of 4 ℃ (40 ℉). For startup when oil temperature is below 4 ℃ (40 ℉), oil preheating is recommended.

5.2.4 Cleaning the lubrication system prior to operation

Before operating the pump, the lubrication system should be thoroughly cleaned to remove any foreign matter that may have accumulated during shipment, storage or installation.

To clean the lubrication system refer to the Sectional drawing and proceeds as follows:

a) Remove the bearing caps, bearing linings, thrust shoes and drain plugs.

b) Flush out the bearing housings with kerosene or other suitable solvent.

c) Wash the bearing linings and thrust shoes with a suitable solvent.

d) Flush the entire lubrication system with oil. Flushing oil should be compatible with lubricating oil that will be used. Follow any instructions given for the lubrication console.

e) During flushing operation, examine the piping for leaks and correct as necessary. Also check for any obstructions that will interfere with free flow of oil to the bearings.

f) After flushing, replace drain plugs. Reassemble bearings and torque end cover bolting. (Refer to *maintenance* section.)

g) Refer to driver instruction book for instructions covering flushing of driver bearings.

5.3 Impeller wearring clearance

Please refer to the sectional drawing for ring and bushing clearance value.

5.4 Direction of rotation

CAUTION Check pump rotating by starting momentarily the direction of rotation is shown in 1.5 *duty conditions*, Note pump coasts to a gradual stop.

5.5 Guarding

Guarding is supplied and fitted to the pump set.

Fasteners must remain captive in the guard when the guard is removed to comply with Machinery Directive 2006/42/EC.

Whenever guarding is removed or disturbed ensure that all the protective guards around the pump coupling and exposed parts of the shaft are securely fixed.

5.6 Priming and auxiliary supplies

CAUTION Ensure all electrical, hydraulic, pneumatic, sealant and lubrication systems (as applicable) are connected and operational.

CAUTION Ensure the inlet pipe and pump casing are completely full of liquid before starting continuous duty operation.

5.7 Starting the pump

5.7.1 Initial start up

See 5.1.3 *Initial start up procedure.*

5.7.2 Normal start up

The starting procedure to be followed for normal start-up is the same as that for initial start-up. When automatic recycle valve is used, discharge valve can be opened.

5.8 Running or operation

Do not wipe down in the vicinity of rotating parts, if unusual noise or vibrations occur, secure the pump as soon as possible.

The unit must not be operated unless coupling guard is bolted in place. Failure to observe this could result in injury to operating personnel.

When pump is equipped with manifolded vent and drain lines, each line must be equipped with an individual valve to prevent any liquid from a high pressure line flowing into a low pressure line. These valves must be kept in the closed position during pump operation.

Observe extreme caution when venting and/or draining hazardous liquids. Wear protective clothing in the presence of caustic, corrosive, volatile, flammable, or hot liquids. Do not breathe toxic vapors. Do not allow sparking, flames, or hot surfacing in vicinity of the equipment.

CAUTION The pump should not be operated outside of the design speed range.

a) Never operate the pump with suction valve closed.

b) Never operate pump unless it is filled with liquid and vented.

c) Never operate the pump unless a liquid source is available.

d) Never operate the pump without proper lubrication.

5.8.1 Operating checks

CAUTION In the interest of operator safety, the unit must not be operated above or below the nameplate conditions. Such operation could result in unit failure causing injury to operating personnel.

CAUTION Operation at low flows results in pump power heating the liquid. A bypass may be required to prevent vaporization and subsequent pump damage. Mechanical damage may result from continuous operation at flows less than the minimum flow specified in the section 10.4 *Customer Data Sheet.*

Immediately after start-up, and frequently during running, check the following:

a) Check suction and discharge pressure gauges.

b) Check pressure gauges on each side of suction strainer.

c) Check for excessive leakage.

d) Check for unusual noises.

e) Check lubrication system.

f) Check for adequate flow of cooling liquids.

g) After unit has been operated a sufficient length of time to reach normal operating temperature and condition, the unit is to be shut down and a “HOT” coupling alignment check must be made. (Refer to *shaft /coupling alignment* procedure).

Operation of the unit without appropriate lubrication can result in overheating of the bearings, bearing failures, pump seizures and actual breakdown of the equipment, exposing operating personnel to injury.

5.9 Stopping and shutdown

If motor driven, de-energize driver circuit. If turbine driven, stop turbine-driven pumps by manually tripping the overspeed trip.

Note: If pump stops abruptly when driver is shut down, investigate for pump binding. Take necessary remedial action before restarting pump.

CAUTION If pump is subjected to freezing temperatures, the pump must be drained of liquid to prevent damage to pump.

a) Close the pump suction and discharge valve.

b) Close valve in bypass line.

c) Drain the pump.

d) Turn off the auxiliary oil pump and cooling liquid when supplied.

5.10 Hydraulic, mechanical and electrical duty

These pumps are furnished for a particular service condition. Changes in the operating system design may affect the pump’s performance adversely. This is

especially true if the changes reduce the pressure at the suction flange or if the liquid temperature is increased. In case of doubt, contact the nearest Flowserve office.

5.10.1 Specific gravity (SG)

The capacity and total head in m (ft) of liquid developed by a centrifugal pump are fixed for every point on the curve and are always at the same speed. Neither capacity nor total head will be affected by a change in the specific gravity of the liquid pumped. However, since the developed pressure in bar (psi) and the power to drive the pump are a function of the specific gravity of the liquid, both will be affected in direct proportion by any change in specific gravity. Therefore, a change in specific gravity will affect the discharge gauge pressure and power. Any changes should be noted, in that they may overload the pump's driver.

5.10.2 Viscosity

The pump is designed to deliver rated capacity at rated head for a liquid with a particular viscosity.

When contemplating operation at some viscosity other than that for which the pump was originally designed and/or applied, the changed conditions should be referred to Flowserve for recommendations.

5.10.3 Changing the Pump speed

Changing the speed of a centrifugal pump changes the capacity, total head and brake Horse Power. The capacity will vary in a direct ratio with the speed, whereas the total head will vary as the ratio of the speed squared. The brake Horse Power will vary as the ratio of the speed cubed except in cases where the speed change also affects the efficiency of the pump.

When contemplating speeds other than of the original condition, refer to Flowserve for recommendations.

5.10.4 Net positive suction head (NPSH)

Any liquid, hot or cold, must be forced into the impeller of the pump without vaporization by the pressure of the vessel from which the pump takes its suction.

The head of liquid necessary to force the required flow into the pump is called the Net Positive Suction Head. This value, more commonly called NPSH, is the head above the vapor pressure of the liquid at the pumping temperature.

There are two kinds of NPSH: The NPSHR by the pump, as shown on the pump curve, is the head needed to cover the losses in the pump suction. The second NPSH is that available in the system, taking into account the friction loss in suction piping, valves, fittings etc. In all cases the NPSHA (measured above vapor pressure) must exceed the NPSHR in order to push the liquid into the pump.

Failure to have an adequate margin of NPSHA over NPSHR will cause a reduction of pump performance and internal damage to the pump.

6 MAINTENANCE

Your pump is a precision machine. Take every precaution to avoid damage or slight burrs to the shaft bearing areas, as well as any other ground, finished surface when dismantling your pump.

It should be understood that the information contained in this manual does not relieve operating and maintenance personnel of the responsibility of exercising normal good judgment in operation and care of the pump and its components.

Before performing any disassembly, maintenance and/or inspection on the unit, the following steps should be taken and warnings observed.

a) Tag driver controls in the "off" position.

⚠ ***Before attempting any inspection or repair on the pump, the driver controls must be in the "off" position, locked and tagged to prevent injury to personnel performing service on the pump.***

b) Isolating Pump.

⚠ ***Before attempting to disassemble pump, pump must be isolated from system, by closing suction and discharge system valves, drained of liquid and cooled, if pump is handling hot liquid.***

c) Draining pump.

Note: Pump cannot be fully drained.

- If handling hot liquids

⚠ ***When pump is handling "hot" liquid, extreme care must be taken to ensure safety of personnel when attempting to drain pump. Hot pumps must be allowed to cool before draining.***

- If handling caustic liquids

⚠ ***When pump is handling "caustic" liquid, extreme care must be taken to ensure safety of personnel when attempting to drain pump. Protective devices of suitable protective materials must be worn when draining pump.***

- If on vacuum service.

⚠ ***Before attempting any maintenance work on pumps in vacuum service, pumps must be isolated from suction and discharge system then carefully vented to return pressure in pump casing to atmospheric pressure.***

6.1 Maintenance schedule

Although your Flowserve pump has been designed for extended, trouble-free service, certain preventive maintenance measures should be performed on a regular basis to ensure optimum performance. A well-planned program of routine maintenance is the best assurance of dependable operation. The following preventive maintenance (PM) inspections are suggested as a minimum, and may be supplemented by the experience of the operating personnel.

Preventive Maintenance Item	Instructions	Frequency
Suction strainer when used	Check pressure differential between the gauges located on each side of the strainer.	Daily
Pump Suction and Discharge Pressure/Flow Rate	Check suction and discharge pressure/flow rate for proper pump operation.	Daily
Mechanical Seal	Inspect visually	Daily
Instrumentation	Check all related pressure gauges, temperature and detectors, etc. to detect any abnormalities.	Daily
Shaft rotation (Down periods only)	During extended down periods rotate the shaft by hand 1-1/4 times to prevent shaft binding.	Monthly
Auxiliary piping	Check for leakage around connections, etc.	Weekly
Shaft/bearing housing vibration	Review all vibration data for any abnormalities and/or sudden changes in levels.	Weekly
Bolting tightness	Check all external bolting for proper torque.	Monthly
Cleanliness	General clean-up soiled areas	Quarterly
Oil system	Refer to Lubrication System section of instruction manual.	Periodically

6.2 Spare parts

6.2.1 Ordering of spares

Flowserve keep records of all pumps that have been supplied. When ordering spares the following information should be quoted:

- Pump serial number
- Pump size/type
- Order number
- Part name – taken from section 8 or pump sectional drawing
- Part number – taken from section 8 or pump sectional drawing
- Number of parts required – taken from section 8 or pump sectional drawing

The pump size and serial number are shown on the pump nameplate.

Order number should be taken from 10.4 *Customer Data sheet.*

For 24-Hour part ordering service, call Flowserve Distribution Center at +1 800 526 3569.

To place an order, contact the nearest Flowserve office found at www.flowserve.com.

⚠ ***The use of parts other than Flowserve approved parts may create hazardous conditions over which Flowserve has no control. Such hazardous conditions can lead to injury, or result in damage to the equipment. Flowserve does not support nor will be responsible for the use of non Flowserve furnished parts nor the use of materials that are not as originally furnished without the expressed written approval of Flowserve.***

6.2.2 Service instructions

For 24-hour emergency repair service, contact the Flowserve Service Department at +1 800 547 8671 or +1 908 859 7372 or contact the nearest Flowserve Service Center.

6.2.3 Storage of spares

Spares should be stored in a clean dry area away from vibration. Inspection and re-treatment of metallic surfaces (if necessary) with preservative is recommended at 6 monthly intervals.

6.3 Recommended spares and consumable items

A recommended spare parts classification is offered for Flowserve parts furnished on this unit. The classification of a required part can be identified by referring to the appropriate assembly drawing and parts list included in section 8 of this manual.

The recommended spare parts are divided into three classifications, which are defined below.

a) CLASS 1 (Minimum): Covers recommended spare parts for a single unit where additional spare parts are ordinarily available from branch or dealer stock. Suggested for Domestic Service handling non-corrosive liquids where interruptions in service are not objectionable. This include gaskets and bearings that are not reusable.

b) CLASS 2 (Average): Covers recommended spare parts for a single unit where additional spare parts are not readily available. Suggested for Domestic Service handling abrasive or corrosive liquids where some interruptions in service are permissible. This includes Class 1 spares plus all renewable wear parts.

c) CLASS 3 (Maximum): Covers recommended spare parts for a single unit where maximum protection from major shutdown must be considered. Suggested for Export Service or Domestic Service where minimum loss of service is essential. This includes Class 1 & 2 spares plus a spare rotating assembly.

The Flowserve Sales Representative in your area will gladly review the class of spares best suited to your requirement.

6.4 Tools required

Note: No special tools are required to assemble or disassemble the pump. Common mechanical tools are sufficient. However we recommend torque wrench to tighten and remove all fasteners.

6.5 Fastener torques

6.5.1 Torque values

The torque values are given for each stud size for both standard casing and high pressure casing with a cross reference to hydro-pressures.

STUD SIZE	DMX/DMXD PUMP		DMXH/DMXDH PUMP	
INCH UN 8	Nm	lbf•ft	Nm	lbf•ft
1.125	750	550	930	685
1.250	1050	775	1310	965
1.375	1425	1050	1775	1310
1.500	1700	1250	2100	1550
1.625	2300	1700	2875	2120
1.750	3150	2320	3930	2900
1.875	4200	3100	5220	3850
2.000	4600	3400	5760	4250
2.250	6670	4920	8340	6150
2.500	9220	6800	11525	8500
2.750	12420	9160	15525	11450
3.000	16160	11920	20200	14900

Note: The above torque values will be applied only when the casing hydro test pressure is equal to or less than the values showing in the following table. Any hydro test pressure exceeding these values must have torque values cleared by Flowserve.

PUMP TYPE	MAX. HYDRO PRESSURE	
	bar	psi
3x8DMX	207	3000
3x10DMX	276	4000
3x10DMXH	414	6000
4x10DMX/DMXD	276	4000
4x10DMXH/DMXDH	414	6000
4x11DMX/DMXD	276	4000
4x11DMXH/DMXDH	414	6000
6x11DMX/DMXD	276	4000
6x11DMXH/DMXDH	379	5500
6x13DMX/DMXD	224	3250
6x13DMXH/DMXDH	345	5000
8x13DMX/DMXD	224	3250
8x13DMXH/DMXDH	248	3600
8x14DMX/DMXD	224	3250
8x14DMXH/DMXDH	248	3600
8x15DMX/DMXD	207	3000
8x15DMXH/DMXDH	248	3600
10x16DMXD	186	2700

Note: The above torque values apply only to standard stud material, i.e. ASTM A193 GrB7. Any other material must have torque values cleared by FLOWSERVE.

Note: The above torque values assume good thread well greased.

When reassembling the pump, all fasteners must be tightened to the correct torque value. Failure to observe this warning could result in injury to operating personnel.

6.6 Disassembly

For a better understanding of this section please refer to the exploded views drawings in section 8.

6.6.1 Dismantling procedure

a) Remove all auxiliary piping and instrumentation that will interfere with disassembly, and drain oil from bearing housings.

Use extreme caution not to expose maintenance personnel to hot liquids when removing auxiliary piping or draining bearing housings.

b) Remove temperature detectors (if supplied) and all other instruments from bearing housings.

c) When mechanical seals are used, loosen piping and seal gland bolting.

6.6.2 Removal of seal chamber parts

To remove mechanical seal from pump:

a) Install setting plates/eccentric washer in place.

b) Loosen drive collar.

c) Remove gland bolting.

d) Slide mechanical seal from shaft after bearing housings are removed as described in 6.6.4 and 6.6.5.

Seal may be disassembled/inspected/reassembled per seal manufacturer's drawing and instructions in Appendix of this manual.

Note: After reassembly of seal, setting plates/eccentric washers must be removed before start-up.

6.6.3 Coupling removal

Remove coupling guard. Remove coupling bolting and remove the spacer piece (if used). Loosen set-screws in coupling nut and remove nut.

The use of a puller will be required to remove it from the shaft.

6.6.4 Thrust bearing removal

a) Remove cap-screws [6570] from bearing end cover [3266]. Remove end cover and shims [3126]. Tag and record thickness of shims for reassembly.

   If pump is equipped with shaft driven main oil pump, "Driver Half" and "Rubber Spider" of coupling should be removed and wired to the support head.

b) Loosen set-screw [6570] in pump side flinger [2540] and slide it back on the shaft towards the Seal Chamber.

c) Remove cap-screws [6570] and dowel pins [6810] from bearing housing [3200]. Rig eyebolt [6820] in bearing housing cap to an overhead hoist and lift bearing cap from bearing housing and place on blocking on floor.

d) The inboard and outboard thrust bearing assembly [3032] can now be removed from the bearing housing [3200]. Tag assemblies to ensure they will be returned to their original position. Refer to thrust bearing drawing and instructions.

e) Remove cap screws and dowel pins from bearing lining [3020].

f) Remove upper half of bearing lining. Raise shaft slightly and roll out the lower half lining.

g) Remove cap-screws [6570] and dowel pins [6810] holding bearing housing [3200] to casing and remove bearing housing and place on blocking on floor.

h) Loosen set screws [6570] in lock nut [3713]. Remove lock nut and bearing seal ring [4020].

i) Remove thrust collar [3610] and key [6700].

Note: It may be necessary to apply heat to thrust collar to remove it. Do not allow temperature to rise above 104 ℃ (220 ℉) when heating thrust collar. Temperature can be checked with "tempil stick".

j) Remove thrust bearing shims [3126]. Record thickness of shims and tie together to prevent shims. Remove flinger [2540] and bearing seal ring [4020].

6.6.5 Plain bearing removal

a) Loosen Allen set-screw [6570] from coupling side flinger [2540] and remove flinger from end of shaft.

b) Loosen Allen set-screw [6570] from pump-side flinger [2540] and slide flinger back on shaft towards the mechanical seal.

c) Remove cap-screws [6570] and dowel pins [6810] from bearing housing [3200]. Rig eyebolt [6820] in bearing cap to an overhead hoist and lift bearing cap from bearing housing and place on blocking on the floor.

d) Install two eyebolts in diagonally opposite corners of bearing housing [3200] and rig to an overhead hoist. Remove cap-screws [6570] and dowel pins [6810] which secure bearing housing to casing. Using the overhead hoist, lower and remove bearing housing [3200] away from casing and place on blocking on the floor.

e) Remove cap screws [6570] and dowel pins [6810] from bearing lining [3020]. Remove upper half of bearing lining. Raise shaft slightly and roll out the lower half lining

6.6.6 Rotor removal

a) Remove cap-nuts [6580] and washers [2905] holding the upper half casing to the lower half. Remove dowel pins [6810]. Using jack-screws [6570] in lower half casing, break the seal between upper half and lower half casing. Rig upper half casing to overhead hoist using the two cast lifting lugs.

⚠ ***The cast lifting lugs provided on upper half casing are for lifting upper half casing only. Do not lift pump from these lugs.***

   Carefully lift upper half casing and place on boards to protect machine surfaces.

b) Rig slings around shaft close to impellers. Rig the slings to an overhead hoist. Carefully lift rotor [2000] from lower casing and place on horses for further dismantling.

Note: Casing wearing rings [1500], channel rings [1500], throttle bushing [1630], center bushing [1600] , seal chamber bushings [4132] and crossover

bushing [1600] if double suction design (DMXD and DMXDH) will be removed with rotor.

CAUTION Block to prevent rolling.

c) Remove seal chamber bushings [4132] and throttle bushing [1630] from shaft ends.

d) Remove casing rings [1500] from the two outer impellers at each end of the rotor.

Note: In case of double suction pump (DMXD and DMXDH), remove crossover bushing [1600]. Crossover bushing is horizontally split and held together by dowel pins [6810].

e) Remove channel rings [1500] from impeller back ring at each impeller. Channel rings are horizontally split and are held together by shoulder screws or dowel pins.

Note: Channel rings are precision machined as a set, after being dowelled. They should be match marked and numbered for reassembly purposes. It is suggested that the two halves be placed back together immediately.

f) Remove center bushing [1600] from center (back to back) impellers. Center bushing is horizontally split and held together by socket head cap-screws [6570] or dowel pins [6810].

6.6.7 Dismantling the rotor

a) Remove throttling sleeve [2430].The throttling sleeve has a shrunk fit to the shaft and will have to be heated to remove. Heat throttling sleeves O.D. evenly throughout its length to approximately 149 ℃ (300 ℉) using a torch with a fine tip.

- Push throttling sleeve inboard (towards impeller)
- Remove split ring [2531]
- Throttling sleeve can now be removed from end of shaft
- Remove throttling sleeve key [6700]

b) Heat (per procedure in 6.6.8) and remove the first outboard impeller [2200], split ring [2531] and impeller key [6700].

When heating parts, gloves or other suitable protection must be worn.

After impeller is heated, it will have to be pushed towards the center of the pump, the split rings [2531] removed and quickly pulled from the end of the shaft.

Note: The shaft is step machined at each impeller fit to ease the disassembly process. It is recommended that each impeller be marked with stage number to insure proper reassembly.

6.6.8 Heating impellers for removal

a) Apply heat (torch with fine tip) to periphery [outer 38 mm (1.5 in.)] of impeller until temperature reaches 191 ℃ (375 ℉) (minimum) to 204 ℃ (400 ℉) (maximum). Use "tempilstick" to determine temperature.

b) Maintaining temperature between. (191 ℃ – 204 ℃ (375 ℉ – 400 ℉) at the periphery, apply heat down through the vane passages, thus heating the hub.

c) Do not apply heat directly to shaft; this will cause it to expand.

d) With periphery, shroud and hub at temperature, remove impeller.

e) If the impeller does not move freely off the shaft, additional heat may be necessary. This heating should be started at the periphery of the impeller, not the hub. (Additional heating of the hub area at this time will tighten the impeller on the shaft, not loosen it). If the impeller still fails to come free, the impeller and shaft should be allowed to cool completely and the heating process repeated, starting at Step a).

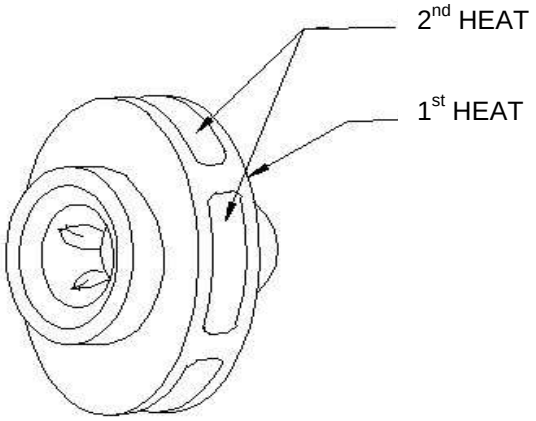

Heating impeller for removal

f) Remove casing ring [1500] from the next impeller on the outboard impellers.

g) Repeat Steps c) and d) until all impellers are removed on the outboard impellers.

Note: Let entire rotor cool after removing several components with heat as there may be a build-up of heat in the rotor.

h) Heat must be applied to remove center sleeve [2450].

i) Continue to disassemble the impellers by repeating steps c) and d) until all impellers [2200] have been removed from the shaft.

Note: In case of double suction pump (DMXD and DMXDH), remove crossover sleeve [2450] after the first stage impeller is removed by applying heat.

6.6.9 Impeller ring removal

Remove impeller rings by removing the set-screws [6570] and machine off.

6.6.10 Parting flange gasket

Remove all traces of old gasket [4590] material. When using any tool to surfaces remove gasket material, do not gouge machined surfaces. Do not reuse the gasket once the casing is opened. Use only Flowserve recommended replacement materials.

6.7 Examination of parts

6.7.1 Inspection and renewal of parts

a) Having completely dismantled the rotor, check the shaft for runout using "V" blocks or rollers placed under the normal running areas. Runout not to exceed 0.050 mm (0.002 in.) TIR.

b) Wire-brush the pump parts thoroughly. Clean off all scale, carbon etc. Examine parts for wearing corrosion and erosion.

c) Check throttling sleeve, center sleeve and crossover sleeve (if supplied) for wear. Replace if required.

d) The casing ring/impeller rings are renewable and should be replaced when badly grooved, and/or when the pump performance does not meet the system requirements. Whenever it becomes necessary to replace either wearing ring, both rings involved (casing ring and impeller ring) must be ordered and replaced as they are furnished standard size only.

If new casing rings are used, make sure that they seat in both the upper and lower half casing and that the anti-rotation device is properly located in its respective lower half casing fit. The use of a scraper on the ring to casing fit will help to fit the ring to the casing.

e) Using a torch could change the metallurgy of the rings if too much heat is applied. Removing impellers with torch is acceptable but putting on new impeller rings shall be done with oven instead of torch.

6.7.2 Dynamic-balance impeller

Whenever an impeller is tampered with, (i.e. new impeller, wear rings installed etc.) the impeller must be dynamically balanced before being reassembled to shaft.

Dynamic balance shall be performed on a suitable balancing machine by trained personnel.

Two balance planes shall be used and located equidistance as possible from the center of gravity of the impeller.

Metal shall be removed from the impeller shrouds during the balancing operation in accordance with the attached sketches until the impeller is within acceptable tolerance limit of unbalance.

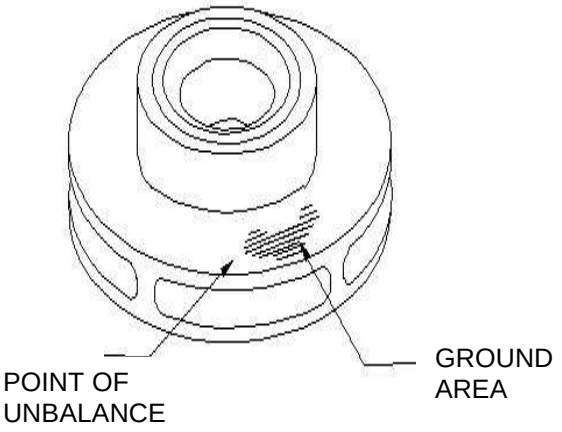

Grinding impeller for dynamic-balance

The maximum allowable unbalance at each of the two planes shall be calculated as follows:

U =4 W / N or .01 oz-in whichever is greater.
U = Unbalance per plane oz-in
W = Impeller weight per plane lb.
Usually 1/2 the total impeller weight.
N = Operational rotational speed RPM

Grinding must not be performed in the area within 19mm (¾") of the final diameter of the impeller. Grinded area's shall have a smooth transition to the not grinded areas and shall be polished. Minimum thickness of impeller shrouds after balancing may not be less than 80% of the nominal thickness per detail drawing.

6.8 Assembly of pump and seal

When reassembling pump, all fasteners must be tightened to the proper torque values. Refer to *sectional drawing* in section 8.

6.8.1 Bearing handling information

Bearings require proper handling and installation to ensure optimum performance. The following information is intended as a minimum to ensure that the bearings are handled and installed properly.

a) Do not remove new bearings from their storage package except to inspect the bearings, when stored for a long period of time or just prior to their installation.

b) Work area must be clean to ensure that no dirt or other contaminates will enter the bearings. Handle bearings with clean, dry hands and with clean, lint free rags. Lay bearing on clean paper and keep covered. Never expose bearings on a dirty bench or floor.

c) Do not wash a new bearing. It is already clean and the preservative should not be removed.

d) Before mounting, be sure shaft bearings areas are clean and free of nicks and burrs. Check the dimensions of these areas to ensure correct fit of bearings.

Note: Under no circumstances are the bearings to be left exposed; they should be protected by wrapping or covered.

6.8.2 Bearing installation

a) When bearings are installed on shaft or journal sleeve, make sure bearing is installed squarely and is firmly seated. Hold bearing in place until it has cooled sufficiently so that it will not move from position. Cover bearings to protect them from dirt.

b) When installing bearing housing onto the bearing and shaft, the bearing housing bores and bearing outside diameter should be coated with the grease or lubricating oil to facilitate assembly.

6.8.3 Impeller ring installation

Impellers ring setscrews can be either axial or radial through the hub.

Make sure ring fit on impeller is free of nicks and burrs. Install the set-screws in the tapered holes on the ring fits. Radial set screw shall be installed in such a way that the socket end is accessible from the inside of the impeller and the point end is just slightly below the ring fit land. It may be easier to install the radial set screw from the outside of the impeller.

Heat the new ring to 148°C. (300°F.) in convection oven to allow for uniform heating. Do not use a torch as this may cause local re-tempering of the material.

After the rings are thoroughly heated, they can be assembled on the impeller hubs. Only one of the internal edges has been machined with a lead in chamfer. Radial location is unimportant as the uniform cross-section around the circumference. Ring must fit up against the shoulder provided on hubs for proper assembly.

After cooling tighten all the set-screws with an allen wrench.

Rings were machined to final size. They do not have to be turned after assembly.

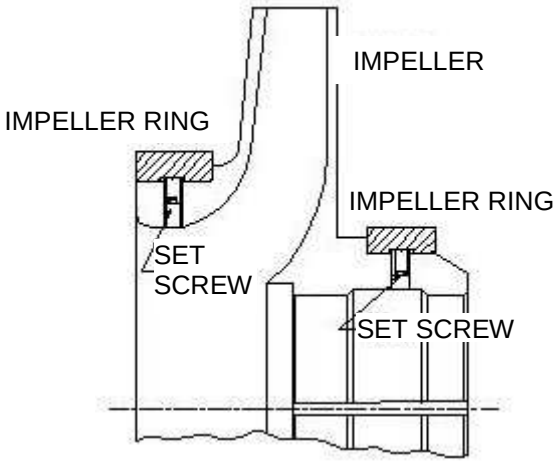

Typical radial screw installation for impeller rings.

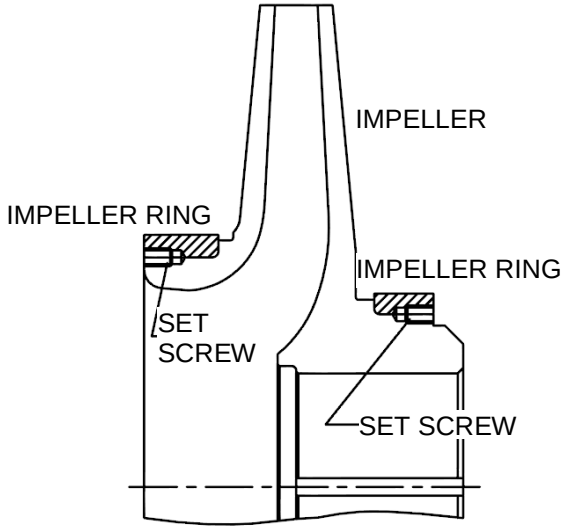

Typical axial screw installation for impeller rings.

6.8.4 Rebuilding rotor

CAUTION Before upstaging or destaging a pump (adding or removing impellers), contact Flowserve Customer Service department for instructions, to avoid permanent damage to the pump rotor.

Note: Split rings and keys shall be pre-fitted and marked for proper location before assembling rotor. Impellers shall be marked for proper location prior to heating for assembling on rotor.

a) Install center stage impeller key [6700], into key way in shaft and pre-fit split rings [2531] to shaft. Split rings to fit snug in groove.

b) All impeller bores and shaft outside diameters are to be dimensionally inspected.

CAUTION Impeller-to-shaft fit must be minimum of 0.0254 mm (0.001in.) to 0.0762 mm (0.003 in.) interference fit.

c) Heat the center impeller [2200] in the suction side in oven, and assemble to shaft, moving the impeller past the split ring groove in the shaft. Quickly install split ring [2531] and pull impeller back to seat against split ring. Constant heat source is preferred to torch; torch is not recommended.

Note: Make sure impellers are installed for proper rotation and location.

d) Install center sleeve [2450] from the opposite end of shaft. Center sleeve is to be seated against the impeller hub installed in Step c).

e) Place casing ring [1500] on impeller front ring.

Put the case ring on the previous impeller before assembling the next impeller. Failure to do so will require a complete dismantle of the rotor.

f) Continue to assemble remaining inboard impellers [2200] per steps a), c) and e).

Note: In case of double suction pump (DMXD and DMXDH), install crossover sleeve [2450] before assembling the first stage impeller.

Note: Let entire rotor cool after removing several components with heat as there may be a build-up of heat in the rotor. It's recommended that runout of shaft be checked.

g) Assemble outboard impellers [2200] per steps a), c) and e).

h) Install throttling sleeve key [6700] to shaft and pre-fit split rings [2531] in shaft to fit smug in groove. Heat the throttling sleeve and slide onto shaft far enough to expose split ring groove. Install split ring and pull sleeve back to seat against split ring.

6.8.5 Indicate and dynamic balance rotor

a) Place the rotor assembly on "V" blocks or rollers. The runout of all impeller wear rings and bushings is not to exceed 0.05 mm (0.002 in.) TIR.

b) All pump rotors are to be dynamic balanced.

Refer to 6.7.2 section for *grinding for balance information.*

6.8.6 Installing rotor in casing

a) The seal chamber bushing [4132], throttle bushing [1630], channel rings [1500] and center bushing [1600] should be checked to make sure they seat in both the upper and lower half casing and that the anti-rotating pins [2923] can be

properly located in the slot on the lower half casing parting flange.

b) Install main parting flange gasket [4590]. Refer to *parting flange gasket*.

c) Place lower half of the center bushing [1600] into the lower half casing [1210], making sure the anti-rotation pins are properly located in the slot on the lower half casing parting flange.

Note: In case of double suction pump (DMXD and DMXDH), place lower half of the crossover bushing [1600] into the lower half casing [1210], making sure the anti-rotation pins are properly located in the slot on the lower half casing parting flange.

d) Place the lower half of all channel rings [1500] in lower half casing, in the same sequence as they were removed, making sure the anti-rotation pins are properly located in the slot on the lower half casing parting flange.

Note: Channel rings are precision machined as a set, after being dowelled. Be sure they are reassembled as a set.

e) Place casing rings [1500], throttle bushing [1630] and seal chamber bushings [4132] in their proper positions on pump rotor.

f) Rig rotor [2000] to an overhead hoist. Refer to *lifting equipment* section of this manual.

g) Position rotor over lower half casing and position bushings and casing rings such that the anti-rotation pins are facing in the up position such that they can be easily rotated in the slot on the lower half casing parting flange.

CAUTION All anti-rotation pins must be located in the slot on the lower half casing parting flange. Failure to do so could cause the pins to be bent or crushed.

h) Lower rotor into casing slowly, making sure it is seated properly.

i) After the rotor is in pump, rotate the rings and bushings on the rotor so that the anti-rotation pins are properly located in the slot on the lower half casing parting flange.

j) Install the upper half of center bushing [1600] and seat taper dowel pins [6810]. Install cap-screws [6570] and tighten.

Note: In case of double suction pump (DMXD and DMXDH), Install the upper half of crossover bushing [1600] and seat taper dowel pins [6810].

k) Install upper half of channel rings [1500] and seat shoulder screws or dowel pins.

l) Check rotor axial float as described in 6.8.8.

m) Rig upper half casing [1210] to an overhead hoist. Refer to *lifting equipment* section.

n) Position upper half casing over lowers half and lower carefully, making sure all rings and bushings enter their proper fit.

o) Install main parting flange dowel pins [6810] and seat.

p) Check rotor axial float and vertical lift as described in 6.8.8 and 6.8.7.

q) Install main parting flange washers [2905] and nuts [6580] and torque to the recommended value.

Note: Make sure parting flange jack-screws [6570], in lower half casing, are backed out far enough so as not to protrude above parting flange machined surface.

6.8.7 Check rotor vertical lift

It is necessary to check and record the vertical lift of the rotor within the casing.

a) Place a dial indicator on the upper half casing with the indicator tip resting on the top of the shaft. Zero the indicator.

b) Using a bar and a block of wood under the shaft, lift the shaft and record the movement. Take measurements at both ends of the pump.

c) The minimum acceptable vertical movement is the minimum back ring clearance on the suction end of the pump and the minimum throttling bushing clearance on the discharge end of the pump. For clearances, refer to the sectional drawings included in section 8 of this manual.

d) If this minimum movement is not obtained, the cause must be investigated and corrected.

6.8.8 Check rotor axial float

a) Push the rotor toward the coupling end as far as it will go.

CAUTION Do not force rotor.

Note: Some of the rotor weight may have to be supported externally. The impeller rings contacting the channel rings are now supporting the rotor.

b) Place a piece of masking tape on the shaft (if seal is used) or shaft sleeve (if seal chamber is used), in the seal chamber area, at the thrust end of the pump. Place a scale across the face of the seal chamber and make a line on the masking tape.

c) Push the rotor toward outboard end as far as it will go. Using scale, mark another line on masking tape.

d) Measure and record the total rotor end float between the two lines. The acceptable minimum end float is given on the pump sectional drawing (included in section 8). If this minimum end float is not obtained, the cause must be investigated and corrected. Two of the most likely causes could be:

- Impellers not properly seated against the split ring.
- Improperly machined part, i.e. impeller ring or channel ring.

e) Mark another line midway between the first two lines. This centerline represents the centering of the impellers within their volutes. Masking tape is to be left on shaft for use in *centralize rotor axially*.

6.8.9 Horizontal and vertical shaft alignment

a) Assemble Plain Bearing:

- Rig bearing housing [3200] to casing. Install dowel pins [6810] and snug cap-screws [6570]. Install both horizontal and vertical adjusting screws [6570] in the bearing housing mounting flange. Remove dowel pins [6810].
- Wipe a film of oil on journal area of shaft. Place lower half of bearing lining on shaft. Wipe a film of oil on lower half of bearing lining. Roll lower half of bearing lining into lower half of bearing housing [3200].

b) Assemble Thrust Bearing:

- Install shim pack [3126] against shoulder of shaft. If shim pack thickness was not recorded at disassembly or if rotor was rebuilt completely, install approximately 1/16 inch of shims.
- Assemble thrust collar key [6700] and thrust collar [3610] to shaft. Fit lock nut [3713].
- Rig the lower half of bearing housing [3200] to an overhead hoist as done during disassembly. Assemble lower half of thrust bearing housing [3200] to casing. Install both the horizontal and vertical adjusting screws [6570] in bearing housing mounting flange. Remove dowel pins.
- Wipe a film of oil on journal area of shaft. Place lower half of bearing lining on shaft. Wipe a film of oil on lower half of bearing lining and roll lower half of bearing lining into lower half of bearing housing.

Note: Bearing housings have been preset at factory and dowelled to the casing. Rotor vertical and horizontal alignment should be checked. Rotor should turn with no indication of binding. Should rotor require further adjustment, remove dowel pins [6810] and proceed with steps c), d) and e).

c) Using a dial indicator and the adjusting screws [6570], adjust the horizontal and vertical position of the shaft inside the seal chamber to within 0.0254 mm (0.001 in.) radially.

d) Repeat step c) on thrust end, then recheck plain end. Pump shaft should turn free with no indication of binding or rubbing. This should be taken into account when making adjustments.

e) If rubs occur, adjust the rotor upwards in 0.025 mm (0.001 in.) increments. Check alignment at both ends after each movement. After adjustment, check for rubs.

f) When vertical and horizontal alignment is obtained, tighten bearing housing bolting-except

the two top bolts at the adjusting screws. Ream the dowel holes and install dowel pins [6810]. Loosen adjusting screws and tighten the two top bearing housing bolts.

6.8.10 Centralize rotor axially

a) Pour a small amount of oil on thrust collar and thrust shoes. Install inboard thrust bearing assembly.

b) Make sure center mark on masking tape is in line with Seal Chamber face per Step e) of *check rotor axial float* instructions.

c) Install dial indicator on thrust bearing housing [3200] so indicator contacts end of shaft. Set indicator at zero.

d) Push rotor outboard to ensure contact between thrust bearing [3013] and bearing housing [3200].

e) Read the distance the shaft moved on the dial indicator. This is the amount of shims [3126] to be installed between thrust collar [3610] and shoulder of shaft.

f) Remove masking tape.

6.8.11 Final bearing assembly

a) Remove inboard thrust bearing assembly.

b) Roll out both lower half bearing linings [3020]. Remove both bearing housings [3200].

c) Remove thrust collar lock nut [3713] and thrust collar [3610].

d) Install both completely assembled mechanical seals to shaft . Insert into seal chamber. Do not tighten gland nuts [6580] or mechanical seal drive collar at this time.

e) Position inboard flingers [2540] and outboard flingers [2540] onto shaft and place in their approximate position. Refer to pump sectional drawing in section 8 of this manual.

f) Slide inboard thrust bearing seal ring [4010] over shaft (refer to thrust bearing drawing and instructions). Rest it on shaft in its proper position. (Refer to pump assembly drawing).

g) Install shims [3126}.

Note: Ensure proper thickness of shims [3126] are seated against shoulder on shaft.

h) Install thrust collar key [6700], thrust collar [3610], and lock nut [3713]. Tighten lock nut and tighten set screws in lock nut.

Note: Before installing thrust collar [3610] onto shaft, heat the thrust collar to 104 ℃ (220 ℉) (M AX.) in successive stages working from periphery towards centre.

i) Rig bearing housings [3200] to an overhead hoist. Assemble bearing housings [3200] to casing. Install dowel pins [6810] and snug cap-screws [6570].

Note: When installing bearing housings to casing, ensure flingers [2540] are properly positioned with the inner part of the bearing housing. Refer to pump sectional drawing in section 8 of this manual.

j) Tighten bearing-body-to-casing screws [6570] to the proper torque value.

Note: Ensure dowel pins [6810] seat correctly to obtain rotor alignment.

k) Wipe a film of oil on journal area of shaft. Place lower half of bearing lining on shaft. Wipe a film of oil on lower half of bearing lining. Roll lower half of bearing lining into lower half of bearing housing [3200].

l) Place upper half of bearing lining [3020] in position on top of shaft.

m) Ensure bearing housings [3200] and parting-flange surfaces are clean and free of dry “permatex”. Coat flange with new “permatex”. Assemble bearing housings [3200]. Install dowel pins [6810] and cap-screws [6570]. Tighten cap-screws to the proper torque value.

n) Assemble lower half of bearing lining [3020] to thrust bearing housing in the same manner as Step k).

o) Assemble upper half of bearing lining [3020] in the same manner as step l).

p) Assemble outboard thrust bearing seal ring [4010] to shaft and temporarily assemble support head [3830] or end cover [3266] to bearing housing. Secure two cap screws.

q) Pour a small amount of oil on thrust collar [3610] and thrust bearing assembly. Assemble inboard and outboard thrust bearings to bearing housing.

Note: Rotate base ring so the "keys" of base ring enter their key ways at the parting flange in the bearing housing.

r) Ensure bearing housing [3200] and parting flange surfaces are clean and free of “permatex”. Coat flange with new “permatex”. Assemble bearing housings [3200]. Install dowel pins [6810] and cap-screws [6570]. Tighten cap-screws to proper torque value.

6.8.12 Set thrust bearing end-play

a) Remove end cover [3266] or support head [3830] from bearing housing. If pump is equipped with a support head and shaft driven main oil pump, assemble shaft extension and "driver half" of coupling to pump shaft.

b) Place shims [3126] against outboard thrust bearing "base ring". Assemble end cover [3266] to bearing housings. Tighten cap-screws [6570] to proper torque value.

c) Install a dial indicator on coupling end bearing housing so the indicator contacts the end of the shaft. Push the rotor outboard (towards thrust bearing) and set indicator at zero. Push rotor inboard. Indicator should read 0.23 mm (0.009 in.) to 0.33 mm (0.013 in.). Add or remove shims [3126] to obtain the proper end-play. Coat end of bearing housings with “permatex” and reassemble end cover, torque and recheck end-play.

6.8.13 Final assembly

a) Position bearing flingers [2540] approximately 1.02 mm (0.040 in.) away from end covers and tightens the set-screws [6570].

b) If pump is equipped with shaft driven oil pump, assemble "driver half" of coupling to oil pump. Position "coupling spider" in the driver half coupling. Assemble oil pump with its gasket to support head. Tighten nuts to proper torque value.

c) Ensure seal gland is seated properly in seal chamber bore. Assemble washers [2905] and tighten nuts [6580] to the proper value. Tighten drive collar.

Note: Refer to *seal chamber.*

d) Using a strap wrench, rotate pump shaft to be sure rotor is properly aligned and does not bind.

CAUTION Do not rotate pump shaft excessively. Internal parts depend on the liquid being pumped for lubrication.

e) Install remaining cap-screws [6570] between bearing end cover [3266] and bearing housing [3200]. Install coupling key, pump-half coupling, coupling nut and set coupling-nut set-screws. Refer to *coupling removal* section.

f) Check coupling/shaft alignment as described under shaft/coupling alignment and assemble coupling.

g) Install coupling guard.

h) Replace all auxiliary piping, instrumentation and pipe plugs.

i) Refer to *Pump lubricants* section for lubrication information.

j) Refer to *Running or operation* section for starting procedure.

6.8.14 Parting flange gasket

a) Using proper recommended 0.397 mm (1/64 in.) thick gasket material, locate and cut stud holes, using upper half casing as a template.

b) Lay gasket on lower half casing, using either a gasket adhesive or a band of shellac approximately 13 mm (1/2 in.) wide on the outer edge of lower casing.

c) Place upper half casing on top of gasket and allow time for gasket adhesive or shellac to set up.

d) Remove upper half casing.

e) Using a sharp knife, cut gasket with downward strokes only. Make sure all cuts are neat and exact, especially on internal edges of casing. If

this is not done, the high-pressure liquid will bypass and erode the ring fits.

Note: It is important that the gasket at the seal chamber be flush with the casing faces. It is necessary hang a little bit of gasket out and cut after final torque.

Do not use any hammering device to cut gasket.

CAUTION When cutting parting flange gasket, do not forget to cut opening for discharge passage.

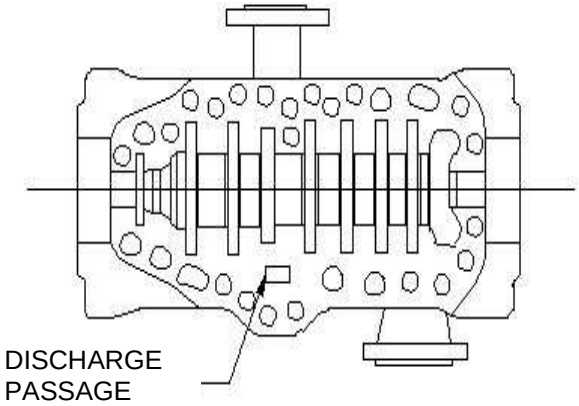

Position of the Parting Flange Gasket

6.8.15 Parting flange torque procedure

Assemble upper half casing to lower half casing and secure with washers and cap-nuts listed on the parts list of the casing. Torque the cap-nuts in three or more complete passes of increasing torque values until the torque values in *6.5.1* are achieved.

Minimum recommended torque passes:
First pass - 50% specified torque value
Second pass- 90% specified torque value
Final pass - 100% specified torque value

Tighten the cap-nuts in the following sequence during each pass:

a) Torque both center cap-nuts – marked O.

b) Torque the cap-nuts shown in below diagram, casing quadrant 3. Start approximately in the center of the pump and proceed towards the suction nozzle.

c) Torque the cap-nuts on the opposite corner of the pump as indicated in below diagram, casing quadrant 4. Again, start at the center of the pump and work towards the opposite end.

d) Torque the cap-nuts in below diagram, casing quadrant 5 in a similar manner.

e) Torque the cap-nuts in below diagram, casing quadrant 6 in a similar manner.

f) Repeat the same sequence two or more times using increasing torque values with each full pass.

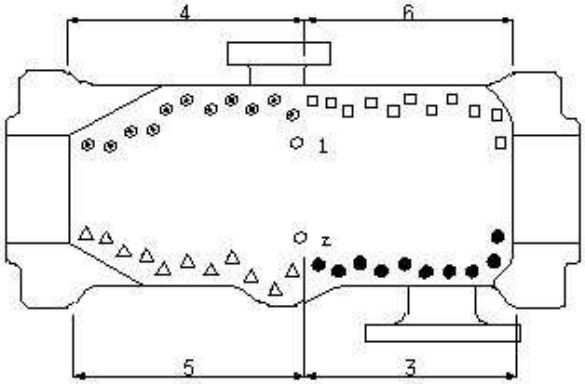

Parting flange torque procedure diagram

7 FAULTS; CAUSES AND REMEDIES

FAULT SYMPTOM

Pump overheats and seizes	Bearings have short life	Pump vibrates or is noisy	Mechanical seal has short life	Mechanical seal leaks excessively	Pump requires excessive power	Pump loses prime after starting	Insufficient pressure developed	Insufficient capacity delivered	Pump does not deliver liquid	PROBABLE CAUSES	POSSIBLE REMEDIES
										A. SYSTEM TROUBLES	
●									●	Pump not primed.	Check complete filling. Vent and/or prime.
		●				●		●	●	Pump or suction pipe not completely filled with liquid.	
		●				●		●	●	Suction lift too high or level too low.	Check NPSHa>NPSHr, proper submergence, losses at strainers and fittings
●		●						●	●	Insufficient margin between suction pressure and vapor pressure.	
						●	●	●		Excessive amount of air or gas in liquid.	Check and purge pipes and system.
						●		●	●	Air or vapor pocket in suction line.	Check suction line design for vapor pockets
						●		●		Air leaks into suction line.	Check suction pipe is airtight.
						●		●		Air leaks into pump through mechanical seal, sleeve joints, casing joint or pipe plugs.	Check and replace faulty parts. CONSULT FLOWSERVE.
		●				●		●	●	Inlet of suction pipe insufficiently submerged.	Check out system design
							●	●	●	Speed too low.	CONSULT FLOWSERVE.
					●					Speed too high.	CONSULT FLOWSERVE.
							●	●	●	Total head of system higher than differential head of pump.	Check system losses. Remedy or CONSULT FLOWSERVE.
					●					Total head of system lower than pump design head.	
					●					Specific gravity of liquid different from design.	Check and CONSULT FLOWSERVE.
					●		●	●		Viscosity of liquid differs from that for which designed.	
●		●								Operation at very low capacity.	Measure value and check minimum permitted. Remedy or CONSULT FLOWSERVE.
	●	●			●					Operation at high capacity.	Measure value and check maximum permitted. Remedy or CONSULT FLOWSERVE.
							●	●	●	Suction pressure too low, Foreign material in suction line.	Open suction valve, Check power supply to correct voltage, Dismantle suction line remove foreign material.
										B. MECHANICAL TROUBLES	
●	●	●	●	●	●					Misalignment due to pipe strain.	Check the flange connections and eliminate strains using elastic couplings or a method permitted
●	●	●	●	●	●					Misalignment due to improper pump/driver setup.	Check alignment and correct as necessary.
		●								Improperly designed foundation.	Check setting of baseplate: tighten, adjust, grout base as required.

FAULT SYMPTOM

Pump overheats and seizes	Bearings have short life	Pump vibrates or is noisy	Mechanical seal has short life	Mechanical seal leaks excessively	Pump requires excessive power	Pump loses prime after starting	Insufficient pressure developed	Insufficient capacity delivered	Pump does not deliver liquid	PROBABLE CAUSES	POSSIBLE REMEDIES
	●	●	●	●	●					Shaft bent (excessive runout)	Check shaft runouts are within acceptable values. CONSULT FLOWSERVE.
●	●	●			●					Rotating part rubbing on stationary part internally.	Check and CONSULT FLOWSERVE, if necessary
●	●	●	●	●						Bearings worn	Replace bearings.
					●		●	●		Wearing ring surfaces worn.	Replace worn wear ring/ surfaces
		●					●	●		Impeller damaged or eroded.	Replace or CONSULT FLOWSERVE for improved material selection.
				●						Leakage under sleeve due to joint failure.	Replace joint and check for damage
			●	●						Shaft sleeve worn or scored or running off center.	Check and replace defective parts.
			●	●	●					Mechanical seal improperly installed.	Check alignment of faces or damaged parts and assembly method used. Refer to mechanical seal instructions.
●	●	●	●	●						Shaft running off centre because of worn bearings or misalignment.	Check misalignment and correct if necessary. If alignment satisfactory check bearings for excessive wear.
●	●	●	●	●						Impeller out of balance resulting in vibration.	Check and CONSULT FLOWSERVE
			●	●	●					Abrasive solids in liquid pumped.	
			●	●						Mechanical seal was run dry.	Check mechanical seal condition and source of dry running and repair.
●	●	●								Excessive thrust caused by a mechanical failure inside the pump.	Check wear condition of Impeller, its clearances and liquid passages.
	●	●								Lack of lubrication for bearings.	Check hours run since last change of lubricant. Check oil level and add if necessary.
	●	●								Improper installation of bearings (damage during assembly, incorrect assembly, wrong type of bearing etc).	Check method of assembly, possible damage or state of cleanliness during assembly and type of bearing used. Remedy or CONSULT FLOWSERVE, if necessary.
	●	●								Damaged bearings due to contamination.	Check contamination source and replace damaged bearings
●	●	●	●	●						Rotating assembly out of balance.	Check balance, runouts, balance as required. CONSULT FLOWSERVE.
●	●	●	●	●						Coupling out of balance	Check for missing parts or damage. CONSULT FLOWSERVE.
		●								Cavitation	Check pump is primed, check for obstruction in suction line.
										C. ELECTRICAL TROUBLES	
		●			●		●	●		Wrong direction of rotation.	Reverse 2 phases on motor terminal box.
					●			●		Motor running on 2 phases only.	Check supply and fuses.
	●	●						●		Motor running too slow.	Check motor terminal box connections and voltage.

8 PARTS LIST AND DRAWINGS

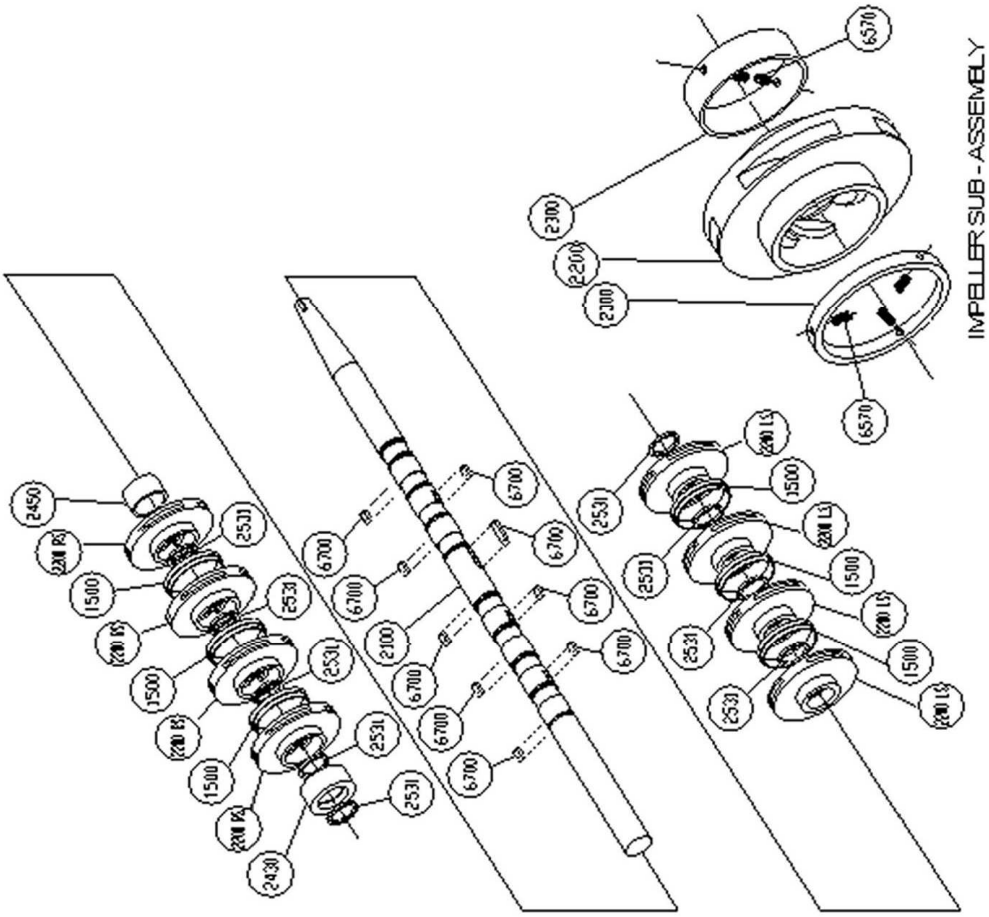

EXPLODED VIEW NO.1

TYPICAL ROTOR ASSEMBLY

TYPICAL ROTOR ASSEMBLY PARTS LIST

NOUN CODE	PART NAME
1500	RING- CASING
2100	SHAFT
2200 LS	IMPELLER ASSEMBLY Left Hand Side
2200 RS	IMPELLER ASSEMBLY Right hand side
2430	SLEEVE - BLEED OFF/THROTTLING
2450	SLEEVE
2531	RING- SPLIT
6700	KEY
IMPELLER ASSEMBLY 2200 LS / 2200 RS CONSISTS OF	
2200	IMPELLER
2300	RING - IMPELLER
6570	SCREW - SET - HD.LESS

NOTE

REFER TO SECTIONAL DRAWING AND PARTS LISTS (FOUND IN APPENDIX OF THIS MANUAL) FOR PART NUMBERS, QUANTITIES, AND RECOMMENDED SPARE PART CLASSIFICATIONS.

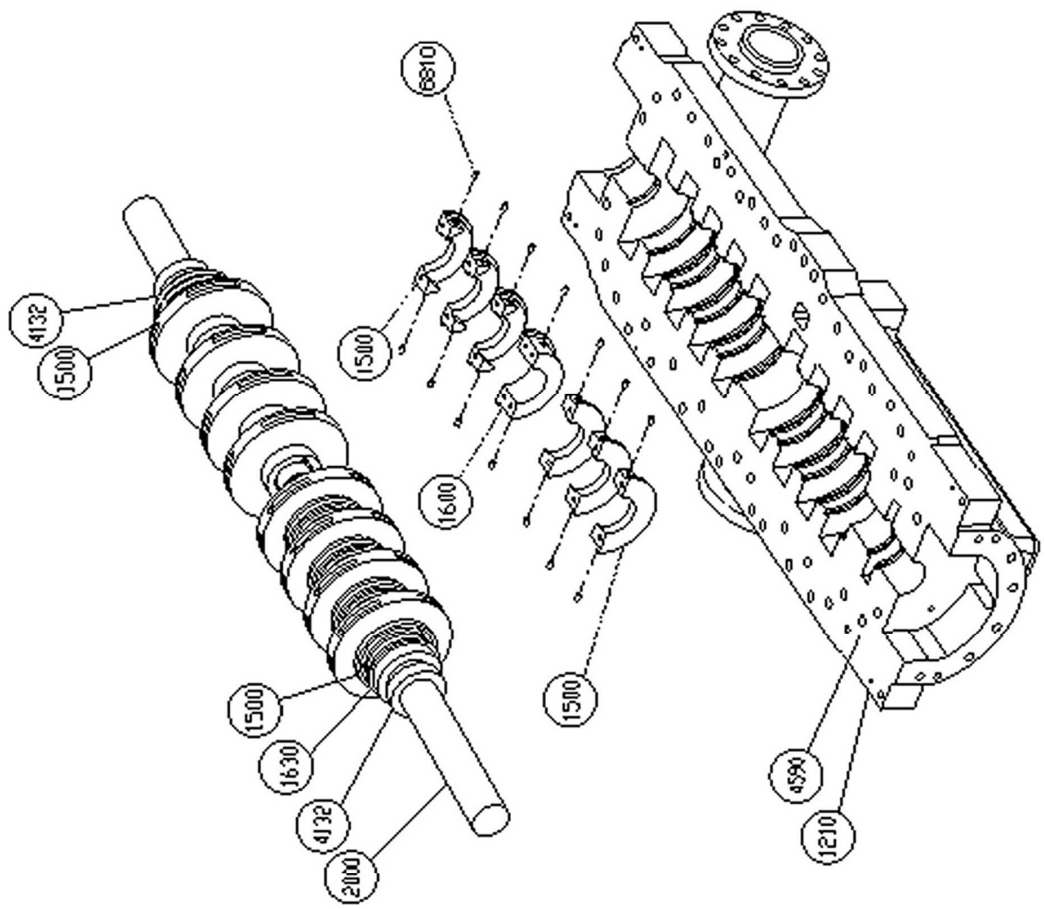

EXPLODED VIEW NO.2

LOWER HALF BUSHINGS,
ROTOR & CASING ASSEMBLY

LOWER HALF BUSHINGS, ROTOR AND
CASING ASSEMBLY PARTS LIST

NOUN CODE	PART NAME
1210	CASING
1500	RING
1600	BUSHING, LOWER HALF
1630	BUSHING - THROTTLING
2000	ROTOR- ASSEMBLY OR SPIN ROTOR
4132	BUSHING - STUFFING BOX
4590	GASKET - MAIN PARTING FLANGE
6810	PIN

NOTE

REFER TO SECTIONAL DRAWING AND PARTS LISTS (FOUND IN APPENDIX OF THIS MANUAL) FOR PART NUMBERS, QUANTITIES, AND RECOMMENDED SPARE PART CLASSIFICATIONS.

UPPER HALF BUSHINGS AND CASING ASSEMBLY PARTS LIST

NOUN CODE	PART NAME
1210	CASING - UPPER & LOWER
1500	RING
1600	BUSHING, ASSEMBLY
1630	BUSHING - THROTTLING
2000	ROTOR - ASSEMBLY OR SPIN ROTOR
2905	WASHER - STAGE STUD, MAIN PARTING FLANGE
4132	BUSHING - SEAL CHAMBER
4590	GASKET - MAIN PARTING FLANGE
6570	SCREW
6572	STUD, MAIN PARTING FLANGE
6580	NUT - CAP, MAIN PARTING FLANGE
6810	PIN

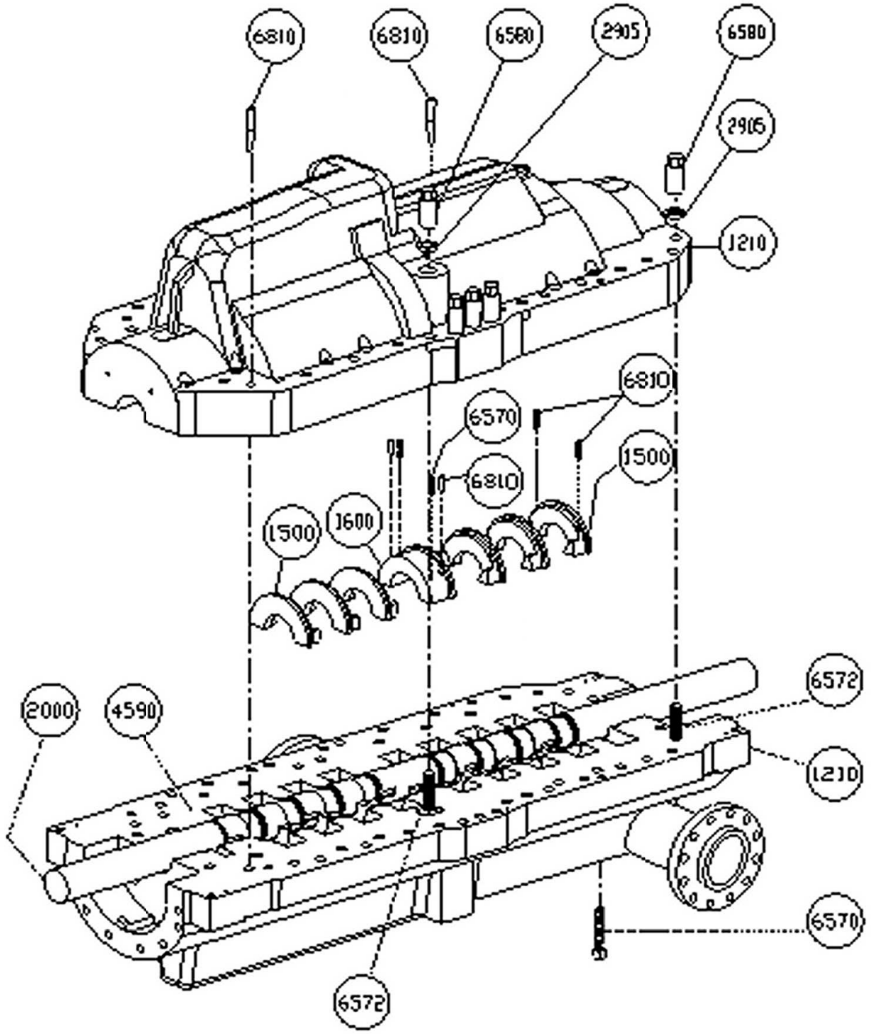

EXPLODED VIEW NO.3

TYPICAL
UPPER HALF BUSHINGS,
ROTOR & CASING ASSEMBLY.

NOTE

REFER TO SECTIONAL DRAWING AND PARTS LISTS (FOUND IN APPENDIX OF THIS MANUAL) FOR PART NUMBERS, QUANTITIES, AND RECOMMENDED SPARE PART CLASSIFICATIONS.

SHAFT SEALING PARTS LIST

NOUN CODE	PART NAME
1210	CASING - ASSEMBLY
2000	ROTOR - ASSEMBLY OR SPIN ROTOR
6572	STUD
	MECHANICAL SEAL
2905	WASHER
4200	SEAL - MECH - COMP - CART
6580	NUT

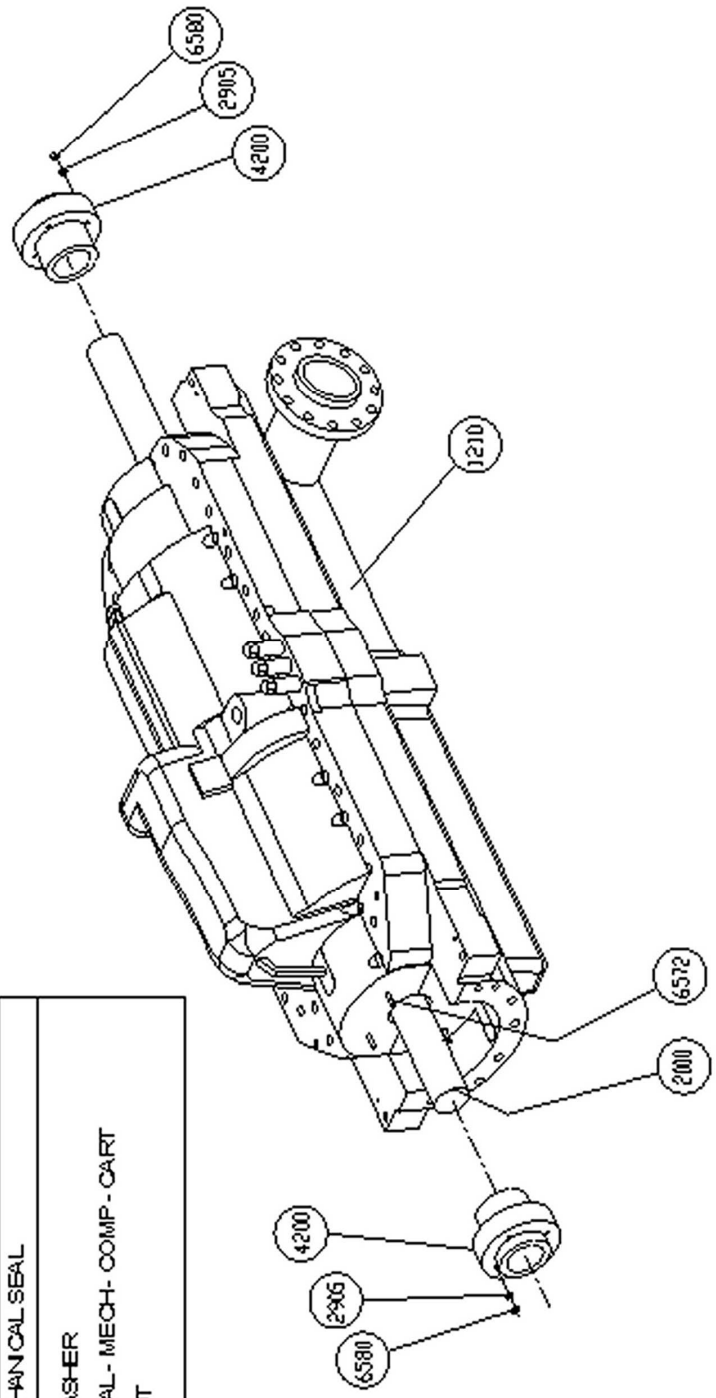

EXPLODED VIEW NO.4
SHAFT SEALING

NOTE

REFER TO SECTIONAL DRAWING AND PARTS LISTS (FOUND IN APPENDIX OF THIS MANUAL) FOR PART NUMBERS, QUANTITIES, AND RECOMMENDED SPARE PART CLASSIFICATIONS.

PLAIN BEARING END PARTS LIST

NOUN CODE	PART NAME
2540	FLINGER
3020	BEARING - SLEEVE
3200	HOUSING - BEARING
3855	OILER - CONSTANT LEVEL
3861	RING - OIL
3858	SIGHT GLASS
6521	PLUG - VENT
6569	PLUG
6570	SCREW
6580	NUT
6810	PIN
6820	BOLT
6521	BREATHER
6970	UNION
9210	PIPE - NIPPLE

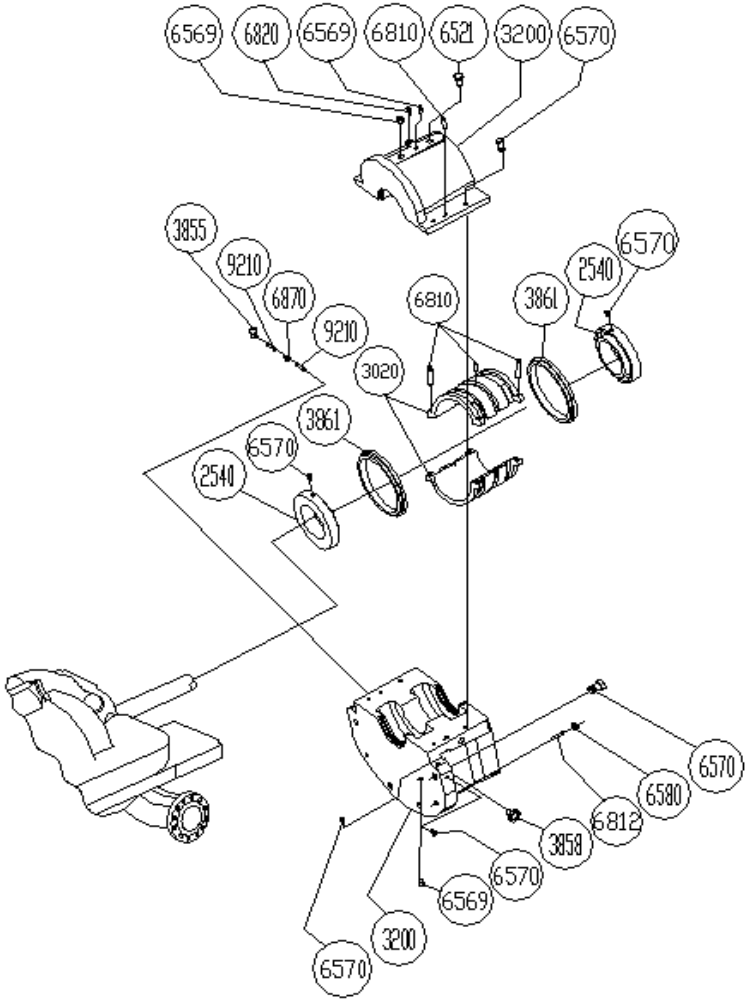

NOTE

REFER TO ASSEMBLY DRAWINGS AND PARTS LISTS (FOUND IN APPENDIX OF THIS MANUAL) FOR PART NUMBERS, QUANTITIES, AND RECOMMENDED SPARE PART CLASSIFICATIONS.

EXPLODED VIEW NO.5

PLAIN BEARING END

THRUST BEARING END PARTS LIST

NOUN CODE	PART NAME
3200	HOUSING - BEARING
3610	COLLAR - THRUST
3858	GAUGE - OIL
6521	CAP - OIL RESERVOIR
6570	SCREW
3713	LOCKNUT - CENTRE COLLAR, THRUST COLLAR
2540	FLINGER
3266	COVER - BEARING END-SOLID
3020	LINING - BEARING COMPLETE
3810	OIL PUMP - GEAR
3126	SHIM
6580	NUT
6810	PIN - DOWEL
6820	BOLT - EYE
6569	PLUG - PIPE
2100	EXTENSION - SHAFT
6572	STUD
6700	KEY - THRUST BEARING
3830	BRACKET
3266	BEARING END CAP
3032	KTB BEARING KIT
4010	RING - BEARING SEAL

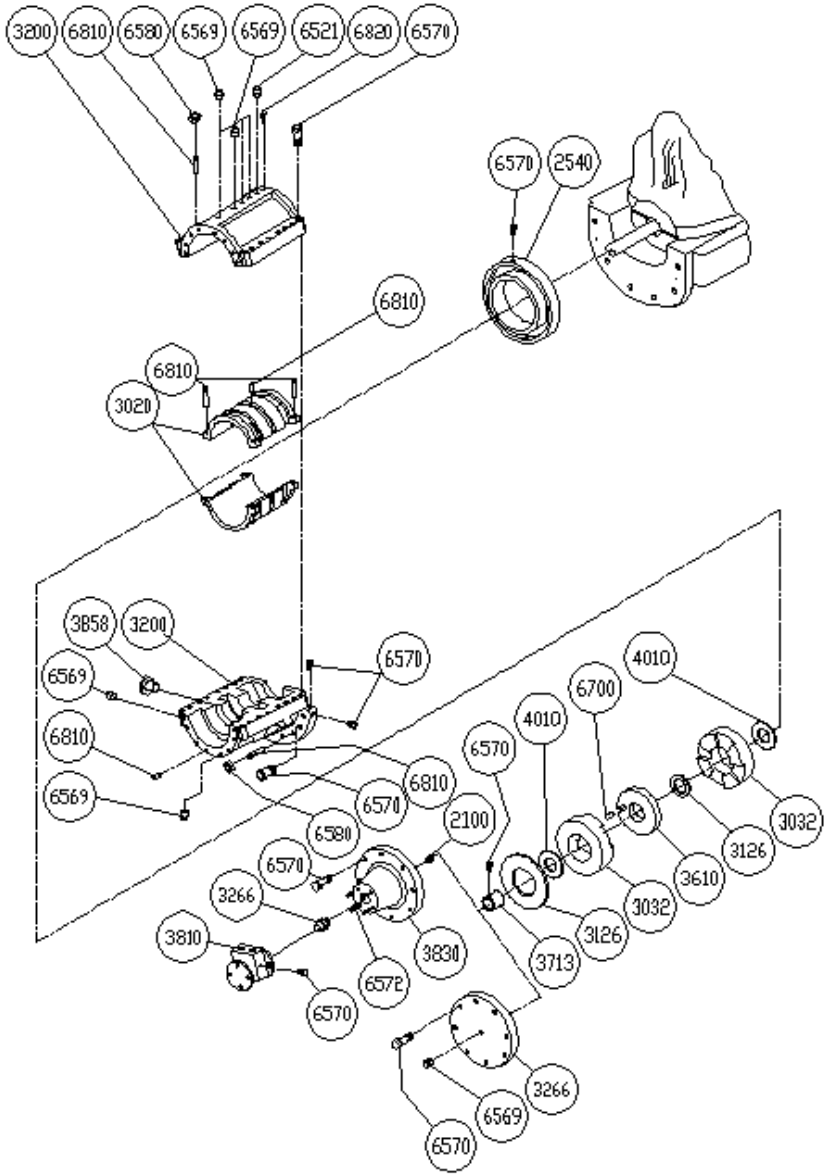

NOTE

REFER TO ASSEMBLY DRAWINGS AND PARTS LISTS (FOUND IN APPENDIX OF THIS MANUAL) FOR PART NUMBERS, QUANTITIES, AND RECOMMENDED SPARE PART CLASSIFICATIONS.

EXPLODED VIEW NO.6

THRUST BEARING END

9 CERTIFICATION

Certificates determined from the Contract requirements are provided with these instructions where applicable. Examples are certificates for CE marking, ATEX marking etc. If required, copies of other certificates sent separately to the Purchaser should be obtained from the Purchaser for retention with these User Instructions.

10 OTHER RELEVANT DOCUMENTATION AND MANUALS

10.1 Supplementary user instruction manuals

Supplementary instruction determined from the contract requirements for inclusion into User Instructions such as for a driver, instrumentation, controller, sub-driver, seals, sealant system, mounting component etc. are included under this section. If further copies of these are required they should be obtained from the purchaser for retention with these User Instructions.

Where any pre-printed set of User Instructions are used, and satisfactory quality can be maintained only by avoiding copying these, they are included at the end of these User Instructions such as within a standard clear polymer software protection envelope.

10.2 Change notes

If any changes, agreed with Flowserve, are made to the product after its supply, a record of the details should be maintained with these User Instructions.

10.3 Additional sources of information

Reference 1:
NPSH for Rotordynamic Pumps: a reference guide, Europump Guide No. 1, Europump & World Pumps, Elsevier Science, United Kingdom, 1999.

Reference 2:
Pumping Manual, 9th edition, T.C. Dickenson, Elsevier Advanced Technology, United Kingdom, 1995.

Reference 3:
Pump Handbook, 2nd edition, Igor J. Karassik et al, McGraw-Hill Inc., New York, 1993.

Reference 4:
ANSI/HI 1.1-1.5
Centrifugal Pumps - Nomenclature, Definitions, Application and Operation.

Reference 5:
ANSI B31.3 - Process Piping.

10.4 Customer Data Sheet

10.4.1 Order information

Purchaser:

Location:

Flowserve order:

Serial numbers:

10.4.2 Technical information

Pump application:

Liquid pumped:

Specific gravity:

Pump size and Type:

Driver:

Pump rating:

Net Positive Suction Head Required:

Net Positive Suction Head Available:

Total Head:

Suction pressure:

Discharge pressure:

Minimum flow:

Pump efficiency at design:

Brake Horse Power (design/max) with pumped liquid:

Pump rotation from coupling end:

Hydrotest pressure:

Maximum temperature:

Bearing lubrication:

Pump hold-down bolt torque value:

10.4.3 Weights

Pump weight:

Driver weight:

Baseplate weight:

Total weight:

NOTES:

NOTES:

NOTES:

Your Flowserve factory contacts:

Flowserve Corporation
Parallelweg 6
4878 AH
Etten-Leur, The Netherlands
Telephone: +31 76 502 8200

Flowserve Spain, S.A.
Poligono Industrial
Avda. Fuentemar, 26-28
E28823 Coslada (Madrid), Spain
Telephone: +34 91 660 4600

Flowserve S.A.
Chuquisaca 302
5547 Godoy Cruz
Mendoza, Argentina
Telephone: +54 261 405 3100

Flowserve Corporation
2300 East Vernon Avenue
Vernon, CA, USA 90058
Telephone: +1 323 587 6171

Your local Flowserve representative:

To find your local Flowserve representative please use the Sales Support Locator System found at www.flowserve.com

FLOWSERVE REGIONAL SALES OFFICES:

USA and Canada
Flowserve Corporation
5215 North O'Connor Blvd.,
Suite 2300
Irving, Texas 75039-5421 USA
Telephone 1 972 443 6500
Fax 1 972 443 6800

Europe, Middle East, Africa
Worthing S.P.A.
Flowserve Corporation
Via Rossini 90/92
20033 Desio (Milan) Italy
Telephone 39 0362 6121
Fax 39 0362 303396

Latin America and Caribbean
Flowserve Corporation
6840 Wynnwood Lane
Houston, Texas 77008 USA
Telephone 1 713 803 4434
Fax 1 713 803 4497

Asia Pacific
Flowserve Pte. Ltd
10 Tuas Loop
Singapore 637345
Telephone 65 6771 0600
Fax 65 6779 4607