FLOWSERVE

Lawrence Pumps® AFH9500
Polyolefin Loop Reactor Pump

High-Pressure Axial Flow Circulator

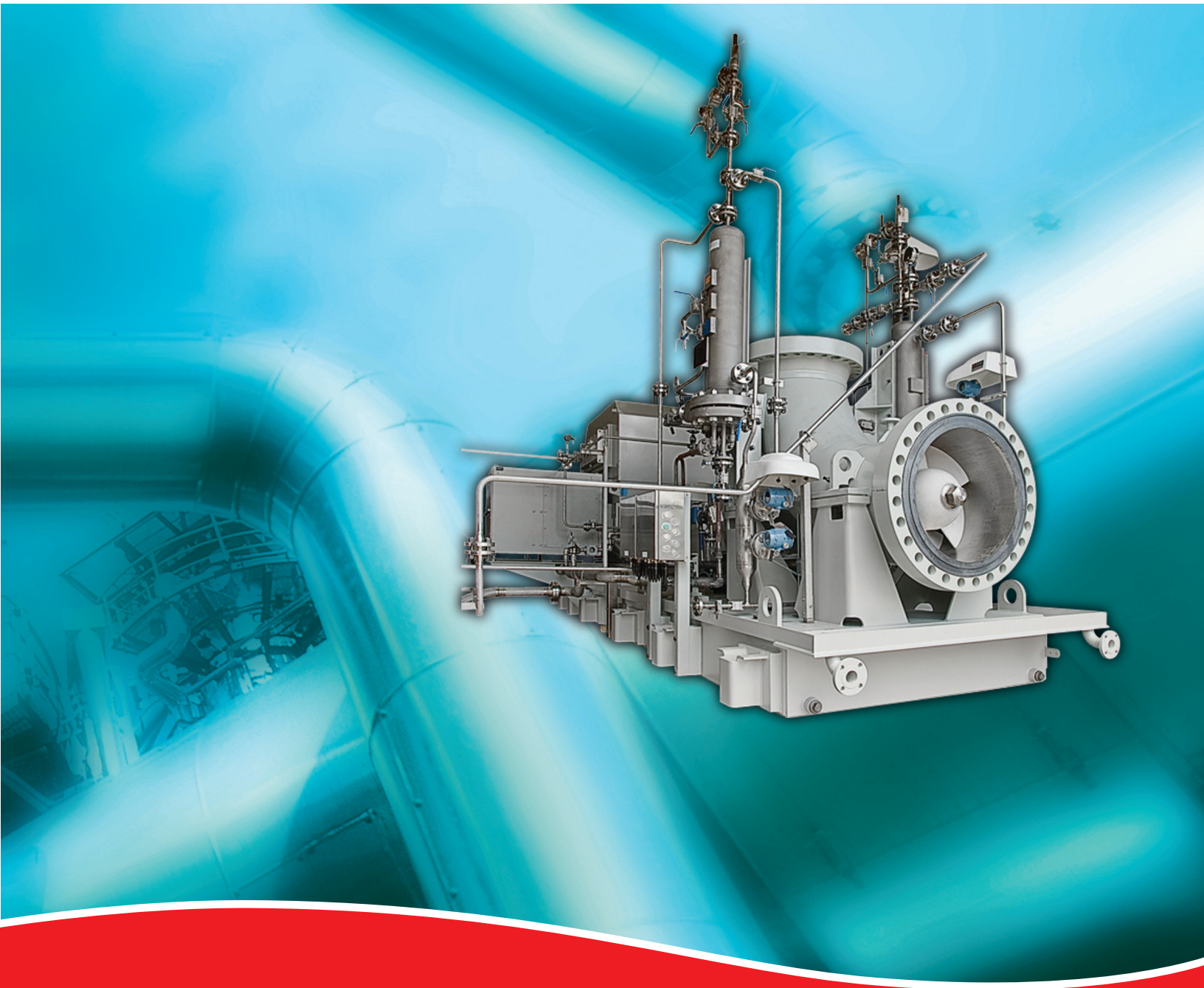

Experience In Motion

FLOWSERVE

Lawrence Pumps AFH9500

Polyolefin Loop Reactor Pump

Industry-Proven Reliability and Process Control

Developed specifically for loop reactor circulation, the Lawrence Pumps AFH9500 high-pressure axial flow pump boasts a well-earned reputation as the industry's preferred pump for polyolefin production. Its high-performance propeller design offers plant operators superior process control, while its conservatively engineered bearing and sealing systems provide the reliability required by an unspared pump. The result is a pump that enables increased plant productivity with extended mean time between planned maintenance.

An Enduring Legacy and Commitment

Through its innovative Lawrence Pumps brand, Flowserve introduced its first axial flow pump for polyolefin production in the 1960s. Over the ensuing half-century, the company has continuously refined and tested its designs to become the overwhelming choice of process licensors and plant operators everywhere. Each pump is custom engineered to ensure its performance meets or exceeds the complex requirements of polyolefin processing for reliability, efficiency, and personnel and environmental safety.

Flowserve provides its globally installed base of Lawrence Pumps loop reactor pumps with unmatched technical and aftermarket support via an extensive worldwide network of service and repair centers.

Applications

Currently available in 13 sizes ranging from 150 mm (6 in) to 900 mm (36 in), the AFH9500 is ideally suited for:

- Slurry phase polypropylene (PP)
- Slurry phase polyethylene (PE)
- Pilot plants for polymer catalyst development
- Custom services

Lawrence Pumps AFH9500

Polyolefin Loop Reactor Pump

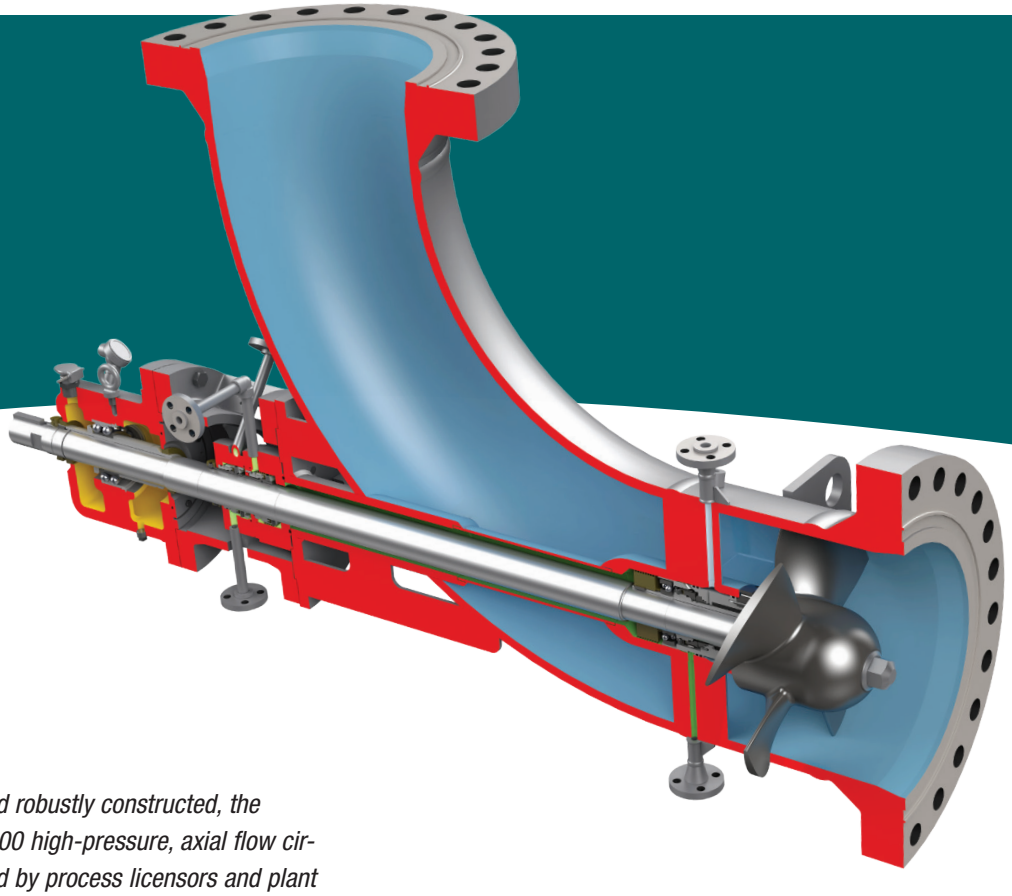

Intelligently designed and robustly constructed, the Lawrence Pumps AFH9500 high-pressure, axial flow circulator pump is preferred by process licensors and plant operators around the world for its:

- *Predictable, high-specific speed performance*
- *Tolerance of process upsets*
- *Easy, minimal cost maintenance*
- *Unspared reliability*
- *Extended maintenance intervals*
- *Lowest total cost of ownership*

Typical Operating Parameters

- Flows to 18 180 m^3/h (80 000 gpm)
- Pressures to 100 bar (1450 psi)
- Temperatures from -45°C (-49°F) to 349°C (660°F)

Custom designs available for limits exceeding those listed.

Features and Benefits

High-pressure Elbow Casing is designed, fabricated and tested per ASME Boiler and Pressure Vessel Code, Section VIII, Division 1 and applicable international standards.

Propellers are engineered with steep pump head curves to ensure process performance requirements are met while allowing superior process control.

Process-wetted Components are typically polished to 63 or 125 RMS to suit process requirements. Special surface finishes are available upon specification.

Triple Seal Arrangement is standard on large pumps, providing added safety and increased reliability over alternative designs. The triple seal consists of a pressurized, double mechanical cartridge seal and a non-pressurized, backup tandem cartridge seal. Other seal arrangements are also available.

API Plan 32/53C/52 Seal Support Systems ensure adequate seal face lubrication and cooling for proper operation. Other support systems are also available.

Robust Bearing Design accommodates axial thrust loads in both directions. Standard SKF® antifriction bearings provide proven reliability with off-the-shelf sourcing for quick and economical maintenance.

Cantilever and Internal Bearing Pump Designs are available, depending on pump size and performance requirements.

Standard Flanges are ASME B16.5 or B16.47, Class 600 weld neck, but alternative ratings and types may be specified. Custom flanges are also available.

® SKF is a registered trademark of the SKF Group.

High-Performance Propeller

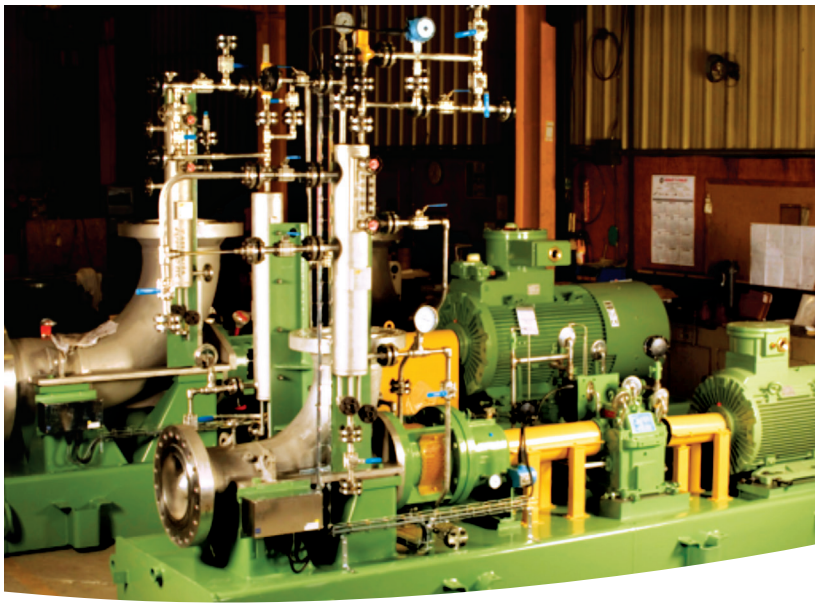

Superior Control for Increased Production

To maximize production, polyolefin plant operators must operate the loop reactor at the highest practical concentration of solids. At higher concentrations, however, the system head curve steepens and flow rates decrease correspondingly. (See adjacent chart.) Precise process control is critical to achieving the desired balance.

With its custom-engineered, high-performance propeller, the AFH9500 has a steep pump head curve to minimize flow rate changes as the system head curve fluctuates with the solids concentration. A steep pump head curve offers superior process flow control, allowing plant operators to aggressively seek the optimum solids concentration and loop output.

Robust Bearing Configurations

The bearing system on the AFH9500 is conservatively designed to provide a mean time between replacement of five years. Depending on the pump size and process parameters, the AFH9500 is fitted with one of two bearing arrangements:

- Self-aligning, ball radial bearing and two single-row, angular contact ball thrust bearings
- Deep-groove ball radial bearings with spherical roller thrust bearings

Both arrangements are able to take reverse thrust. Lubrication is via oil bath and incorporates a constant level oiler and sight glass. Labyrinth-type bearing isolators are standard.

Impact of Steep Pump Head Curve

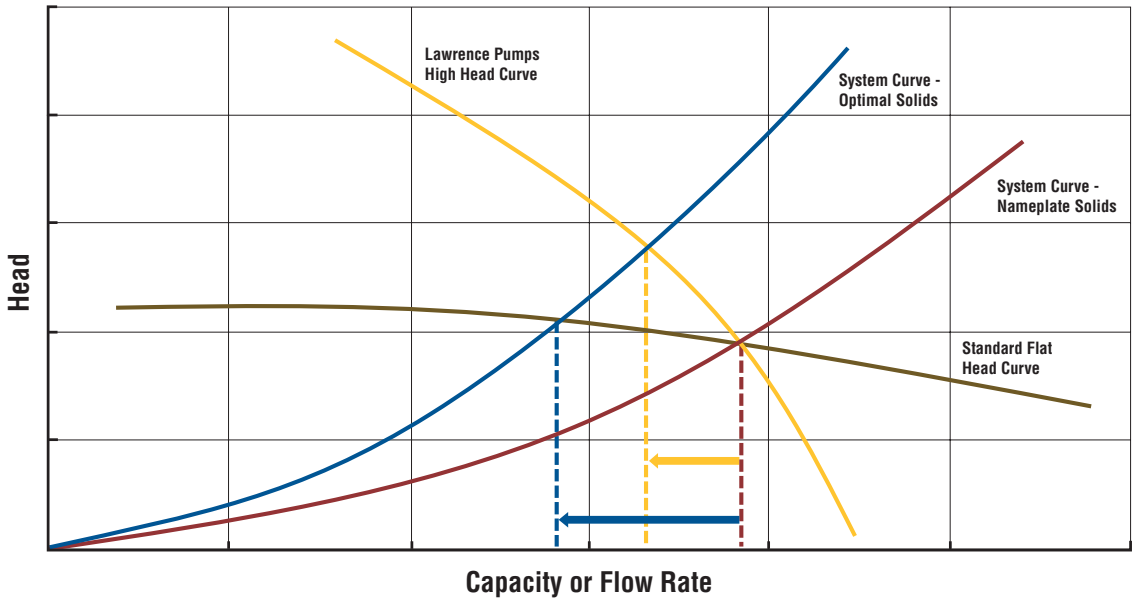

Options and Technical Data

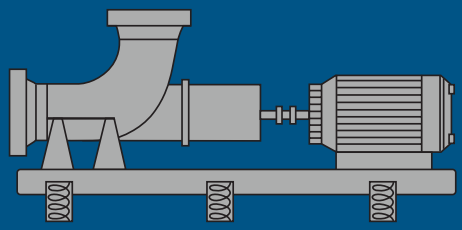

Flexible disc coupling and spring-mounted baseplate

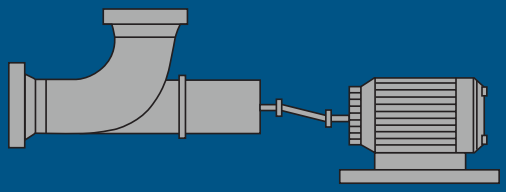

Suspended pump with electric motor and cardan shaft coupling

Installation Configurations

The AFH9500 is available in several configurations to suit site requirements and customer preference. The most common, reliable and cost-effective configurations are:

- Horizontal direct or variable-speed drive with flexible disc coupling and spring-mounted baseplate
- Horizontal suspended pump with electric motor drive and cardan shaft coupling

Materials of Construction

Pressure-retaining components of the AFH9500 are made from ASME Section 2 compliant materials, including:

- Carbon steel
- Low-temperature carbon steel
- 304/304L stainless steel
- 316/316L stainless steel

Other materials are available upon request.

Seal Support Systems

The AFH9500 is available with several seal support systems to meet customers' specific requirements. Available options include:

- Unpressurized dual seal API Plan 52 with an API Plan 32 flush. This style is typically utilized on small pumps, but can also be provided on large pumps in combination with an internal sleeve bearing that supports the shaft near the propeller.
- Triple-seal design (see below) consisting of a pressurized dual seal API Plan 53 with pressurization accumulator (piston pot) and an unpressurized dual seal API Plan 52 in a tandem arrangement. This system also utilizes an API Plan 32 flush. It is available in all pump sizes without requiring the use of an internal sleeve bearing.

Triple-Seal Support System

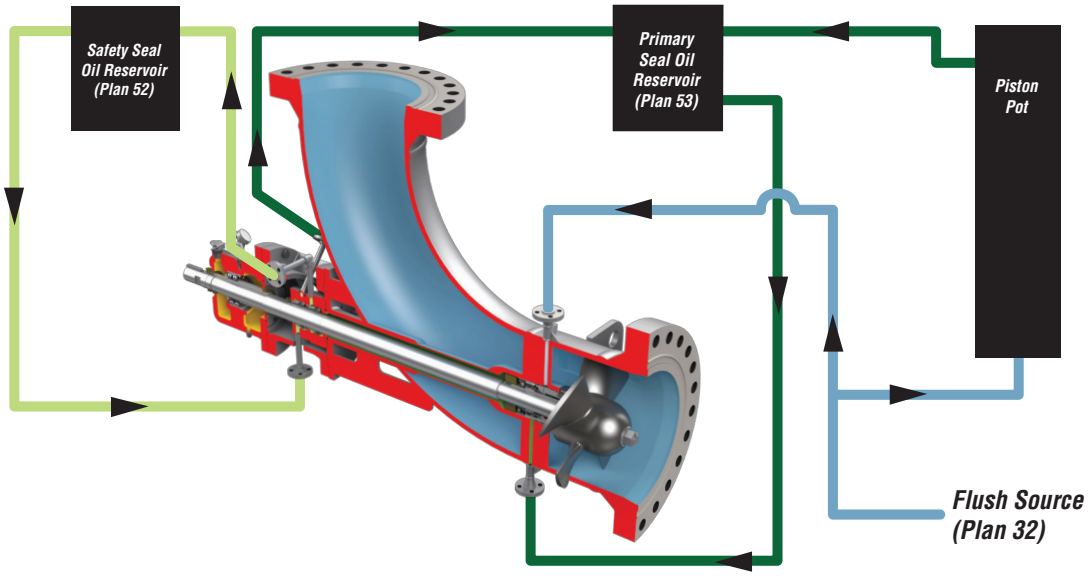

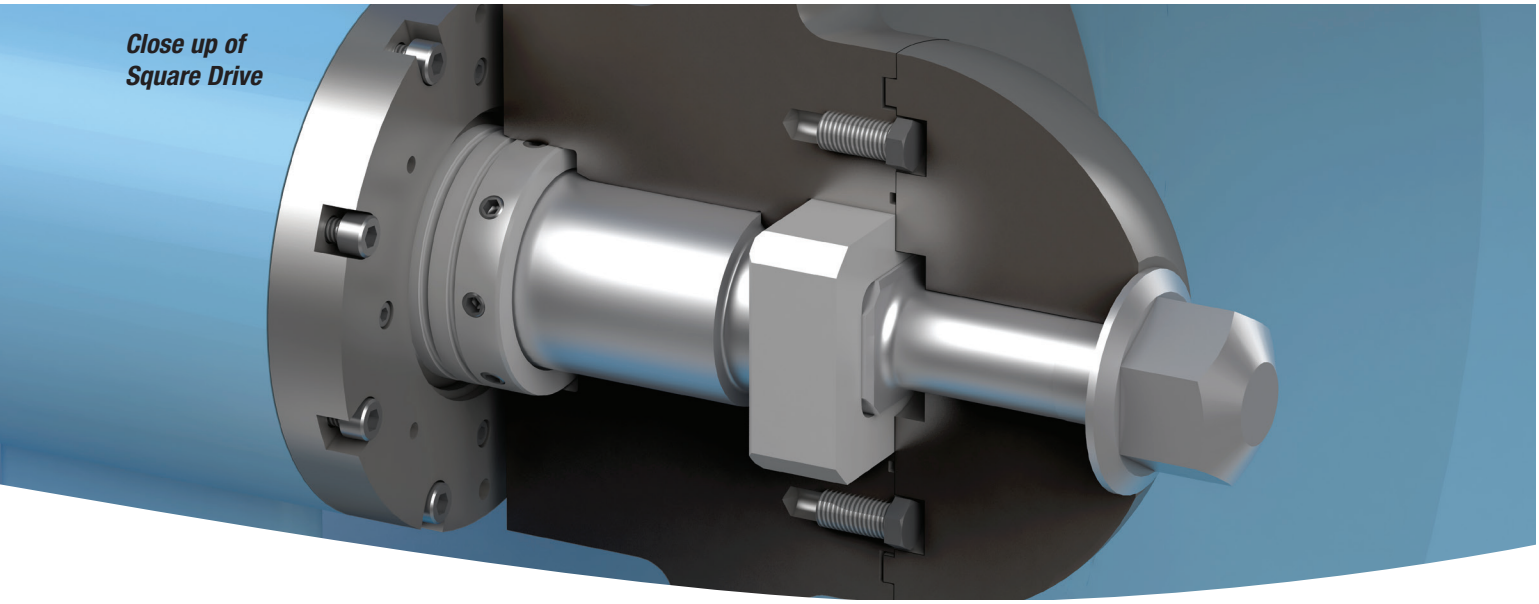

Upgrades Designed to Increase Plant Revenue

Through its Lawrence Pumps brand, Flowserve offers hydraulic and mechanical upgrades to polyolefin loop reactor pumps that can significantly impact pump performance, and as a consequence, plant revenues.

The chart below shows the impact on plant revenue by increasing production, based on a 350 000 metric tons-per-year facility using an average value for product of US $1500 per metric ton.

Reactor Pump Performance vs. Revenue

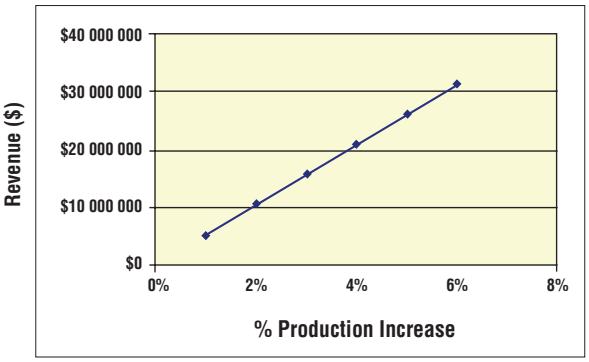

A 2% increase in production provides an increase in revenue of more than US $10 000 000 per year, assuming that the solids removal capacity of the reactor loop is proportional to the solids-loading rate.

Hydraulic Upgrades

Lawrence Pumps offers a complete range of high-performance propellers that provide higher heads and flows at the same operating speed. A reactor pump upgraded with a Lawrence Pumps propeller has a steeper head curve, providing loop operators superior flow control so they can aggressively seek the optimum solids concentration and loop output.

Mechanical Upgrades

If bearings and mechanical seals have been affecting reactor pump reliability, Flowserve offers complete rotating assembly and component upgrades featuring advanced Lawrence Pumps technology.

Replacement bearing and seal systems are only as good as their support systems. Advanced Lawrence Pumps pressurization and circulation support systems can both increase reliability and decrease rebuild time. Electronic vibration, temperature and level monitoring are also available to help with early diagnosis of any issues that could develop.

The Lawrence Pumps square drive propeller attachment mechanism (depicted above) simplifies maintenance tasks so pumps can be returned to service more quickly.

Europe, Middle East, Africa
Flowserve Corporation
Parallelweg 13
4878 AH Etten-Leur
The Netherlands
Telephone: +31 76 502 8100

Latin America
Flowserve Corporation
Martín Rodriguez 4460
B1644CGN-Victoria-San Fernando
Buenos Aires, Argentina
Telephone: +54 11 4006 8700
Telefax: +54 11 4714 1610

Asia Pacific
Flowserve Pte. Ltd.
10 Tuas Loop
Singapore 637345
Telephone: +65 6771 0600
Telefax: +65 6862 2329

To find your local Flowserve representative:

For more information about Flowserve Corporation, visit www.flowserve.com or call +1 937 890 5839.

USA and Canada
Flowserve Corporation
5215 North O'Connor Blvd.
Suite 2300
Irving, Texas 75039-5421 USA

PUBR003734-00 (EN/LTR) July 2026

Flowserve Corporation has established industry leadership in the design and manufacture of its products. When properly selected, this Flowserve product is designed to perform its intended function safely during its useful life. However, the purchaser or user of Flowserve products should be aware that Flowserve products might be used in numerous applications under a wide variety of industrial service conditions. Although Flowserve can provide general guidelines, it cannot provide specific data and warnings for all possible applications. The purchaser/user must therefore assume the ultimate responsibility for the proper sizing and selection, installation, operation, and maintenance of Flowserve products. The purchaser/user should read and understand the Installation Instructions included with the product, and train its employees and contractors in the safe use of Flowserve products in connection with the specific application.

While the information and specifications contained in this literature are believed to be accurate, they are supplied for informative purposes only and should not be considered certified or as a guarantee of satisfactory results by reliance thereon. Nothing contained herein is to be construed as a warranty or guarantee, express or implied, regarding any matter with respect to this product. Because Flowserve is continually improving and upgrading its product design, the specifications, dimensions and information contained herein are subject to change without notice. Should any question arise concerning these provisions, the purchaser/user should contact Flowserve Corporation at any one of its worldwide operations or offices.

©2026 Flowserve Corporation. All rights reserved. This document contains registered and unregistered trademarks of Flowserve Corporation. Other company, product, or service names may be trademarks or service marks of their respective companies.

flowserve.com