# Worcester® LQI

## Compact Quarter-Turn Fail-Safe Electric Actuators

*Experience In Motion*

# Product Overview

The LQI compact, spring return **fail-safe** electric actuators offer superior reliability and performance as well as lower Total Cost of Ownership (TCO). They provide broad application versatility and are highly customizable for meeting exacting customer needs. LQI actuators are designed to provide fail-safe positioning with a wide range of quarter turn valves, and also can be used to drive dampers in a broad range of power, oil and gas, chemical, water and general industry applications.

# Product Features

## Standard

- Aux Limit Switches (2)
- Anti-condensation Heater
- Motor Thermal Overload Protection
- High Efficiency AC/DC drive motors
- Permanently Lubricated
- IP68 Rated
- Mechanical Spring Buffer

# Product Options

| Options | Description | WP | EX |
|---|---|---|---|
| **Pot** | Two resistences are available for selection: 1k ohm or 5k ohm. | • | • |
| **Modulating** | • Includes Pot and Analog input/output board<br>• Analog Input: 4-20mA, 1-5V and 2-10V<br>• Analog Output: 4-20mA and 2-10V | • | • |
| **Analog Output** | Analog output: 0-20 mA, 4-20 mA, 0-5 V, 0-10 V, 1-5 V and 2-10 V | • | • |
| **Manual Override** | Clutch-less manual override allows the valve or damper to be manually operated by the hand-wheel upon a power loss | • | • |
| **SIL** | SIL2 Certified with or without use of manual override. Available on Models 1-4 | • | • |
| **Paint** | Optional C5 paint system for hazardous environments | • | |

## Duty Cycle

| Model | Control Mode | Description | WP | EX |
|---|---|---|---|---|
| **LQIFS 1/2/3/4/5**<br>(See Note) | **On-Off / Floating** | 50% duty cycle: -30°C to +40°C (-22°F to +104°F)<br>30% duty cycle: +41°C to +65°C (+105°F to +149°F) | • | |
| **LQIFS 1/2/3/4**<br>(See Note) | **Modulating** | 50% duty cycle: -20°C to +40°C (-4°F to +104°F)<br>30% duty cycle: +41°C to +65°C (+105°F to +149°F) | • | |
| **LQIFS 1/2/3/4** | **All EX** | 50% duty cycle: -30°C to +70°C (-22°F to +158°F) | | • |

Note: Weather Proof duty rating is based on ambient temperature

# Explosion-Proof Certifications

## ATEX Hazardous Areas Certification for European Union

| Directive | Marking | | Ambient Temperature | WP | EX |
|---|---|---|---|---|---|
| ATEX II 2 GD | Ex db IIBT 4 Gb (Standard) | Ex db h IIBT 4 Gb (with manual override) | -30°C to +70°C (-22°F to +158°F) | | • |
| ATEX II 2 GD | Ex tb IIIC T130°C Db (Standard) | Ex tb h IIIC T130°C Db (with manual override) | -30°C to +70°C (-22°F to +158°F) | | • |
| Standards: EN IEC 60079-0, EN 60079-1, EN 60079-31, EN ISO 80079-36, EN ISO 80079-37 | | | | | |

## IECEx Hazardous Areas Certification for International Market

| Marking | | Ambient Temperature | WP | EX |
|---|---|---|---|---|
| Ex db IIBT 4 Gb (Standard) | Ex db h IIBT 4 Gb (with manual override) | -30°C to +70°C (-22°F to +158°F) | | • |
| Ex tb IIIC T130°C Db (Standard) | Ex tb h IIIC T130°C Db (with manual override) | -30°C to +70°C (-22°F to +158°F) | | • |
| Standards: IEC 60079-0, IEC 60079-1, IEC 60079-31, ISO 80079-36, ISO 80079-37 | | | | |

## CSA Hazardous Areas Certification for North America

| Zone System | | | | | | | | |
|---|---|---|---|---|---|---|---|---|
| Code | Hazard Class | Permitted Zone | Equitment Protection Level (EPL) | Group (Gas / Dust) | Temperature Classification | Ambient Temperature | WP | EX |
| AEx / Ex | I | 1 | db | IIA, IIB | T4 | -30°C to +70°C (-22°F to +158°F) | | • |
| AEx / Ex | II | 21 | tb | IIIA, IIIB, IIIC | T130°C | -30°C to +70°C (-22°F to +158°F) | | • |
| Standards: CAN / CSA-C22.2 No. 60079-0, CAN / CSA-C22.2 No. 60079-1, CAN/ CSA-C22.2 No. 60079-31, UL 60079-0, UL 60079-1, UL 60079-31 | | | | | | | | |

| Division System | | | | | | |
|---|---|---|---|---|---|---|
| Hazard Class | Permitted Division | Group (Gas / Dust) | Temperature Classification | Ambient Temperature | WP | EX |
| I | 1 | C, D | T4 | -30°C to +70°C (-22°F to +158°F) | | • |
| II | 1 | E, F, G | T130°C | -30°C to +70°C (-22°F to +158°F) | | • |
| Standards: CSAC22.2 No. 30-M1986, CSAC22.2 No. 25-17, FM 3600, FM 3615, FM 3616 | | | | | | |

# Technical Information

## Weather Proof

| Model | Torque | | Nominal Motor Power (W) | Weight | | | | Mounting Base | | |
|---|---|---|---|---|---|---|---|---|---|---|
| | Nm | in-lb | | Standard | | With Manual Override | | Flange Type | Output Drive (A) | Output Drive Depth (B) |
| | | | | kg | lb | kg | lb | ISO 5211 | mm | mm |
| LQIFS 1 | 50 | 445 | 50 | 27 | 60 | 37 | 82 | F07 | 17 | 30 |
| LQIFS 2 | 130 | 1150 | 130 | 57 | 126 | 77 | 170 | F10 | 22 | 41 |
| LQIFS 3 | 200 | 1770 | 130 | 93 | 205 | 131.5 | 290 | F12 | 27 | 45 |
| LQIFS 4 | 260 | 2300 | 130 | 95 | 210 | 133.5 | 295 | F12 | 27 | 45 |
| LQIFS 5 | 360 | 3185 | 130 | 103 | 228 | 152 | 336 | F12 | 36 | 46 |

## Explosion Proof

| Model | Torque | | Nominal Motor Power (W) | Weight | | | | Mounting Base | | |
|---|---|---|---|---|---|---|---|---|---|---|
| | Nm | in-lb | | Standard | | With Manual Override | | Flange Type | Output Drive (A) | Output Drive Depth (B) |
| | | | | kg | lb | kg | lb | ISO 5211 | mm | mm |
| LQIFS 1 | 50 | 445 | 50 | 28 | 62 | 38.5 | 85 | F07 | 17 | 30 |
| LQIFS 2 | 130 | 1150 | 130 | 63 | 139 | 83 | 183 | F10 | 22 | 41 |
| LQIFS 3 | 200 | 1770 | 130 | 96 | 212 | 135 | 298 | F12 | 27 | 45 |
| LQIFS 4 | 260 | 2300 | 130 | 96 | 212 | 135 | 298 | F12 | 27 | 45 |

### Operating Direction

The spring return direction cannot be changed in the field and must be configured at time of order.

Please select the fail action according to the required application.

# Product Order Matrix

| Model | - | Input Power | Fail Dir | Control Type | Override | Enclosure | - | Pot | Control | Conduit | Paint |
|---|---|---|---|---|---|---|---|---|---|---|---|
| **LQIFS 1**<br>50Nm - 445in-lb | | **(1)**<br>24VAC | **(0)**<br>CW | **(F)**<br>Floating | **(0)**<br>None | **(8)**<br>IP68<br>(WP) | | **(0)**<br>None | **(0)**<br>None | **(1)**<br>3/4" NPT | **(3)**<br>C3 |
| **LQIFS 2**<br>130Nm - 1150in-lb | | **(2)**<br>24VDC | **(1)**<br>CCW | **(M)**<br>Modulating | **(M)**<br>Manual<br>Override | **(E)**<br>EX | | **(1)**<br>1K Pot | **(2)**<br>Analog<br>In/Out | **(3)**<br>M20 | **(4)**<br>C4/C5<br>(WP) |
| **LQIFS 3**<br>200Nm - 1770in-lb | | **(3)**<br>110-120 1PH | | **(T)**<br>Two Wire<br>On/Off | | **(5)**<br>IP68-SIL<br>(WP) | | **(5)**<br>5K Pot | **(3)**<br>Analog<br>Out | | |
| **LQIFS 4**<br>260Nm - 2300in-lb | | **(4)**<br>220-240 1PH | | | | **(L)**<br>EX-SIL | | | | | |
| **LQIFS 5**<br>360Nm - 3185in-lb<br>(WP Only) | | **(5)**<br>220-240 3PH<br>(See Note) | | | | | | | | | |
| | | **(6)**<br>380-415 3PH<br>(See Note) | | | | | | | | | |
| | | **(7)**<br>440-480 3PH<br>(See Note) | | | | | | | | | |

## Supply Voltage and Control Mode

| **Model** | 24 V AC | 24 V DC | 110 - 120 V AC | 220 - 240 V AC | 220 - 240 V AC 3PH | 380 - 415 V AC 3PH | 440 - 480 V AC 3PH |
|---|---|---|---|---|---|---|---|
| Control | Control Mode | | | | | | |
| LQIFS 1 | On-Off | On-Off | On-Off<br>Floating<br>Modulating | On-Off<br>Floating<br>Modulating | On-Off | On-Off | On-Off |
| LQIFS 2 | | | | | | | |
| LQIFS 3 | | | | | | | |
| LQIFS 4 | | | | | | | |
| LQIFS 5 | | | On-Off | On-Off | N/A | N/A | N/A |

Notes

- (WP) = Non-Explosion Proof
  (EX) = Explosion Proof
- 3PH for Explosion Proof units is only available at 220, 380, and 440
- Standard 4 LS (2 Control, 2 Aux)
- Standard Heater Included
- Standard fail direction is clockwise

# Weather-Proof Outline Dimensions

## LQIFS 1

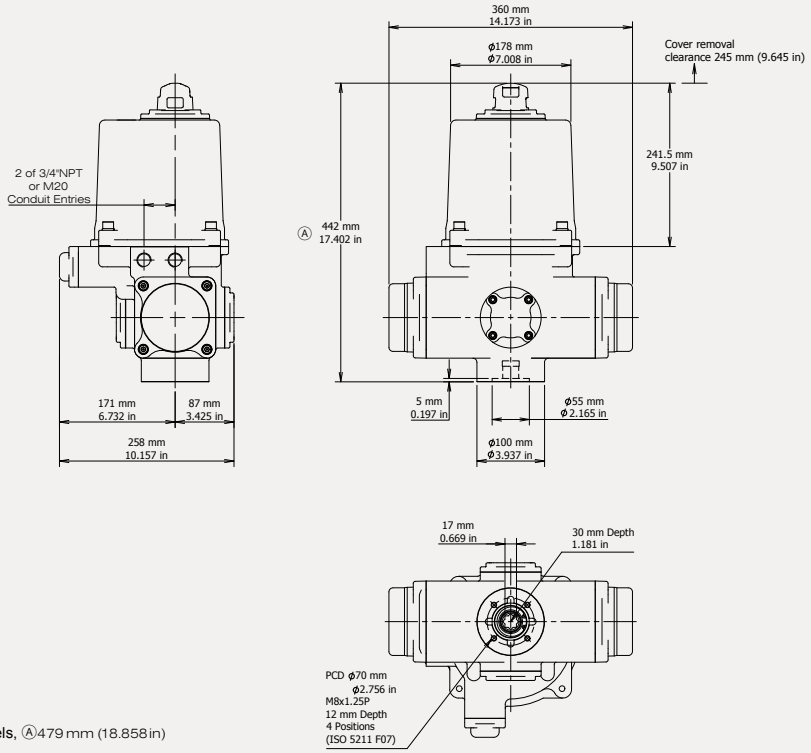


Apply to 3 phase models, Ⓐ479 mm (18.858 in)

## LQIFS 1 (with handwheel)

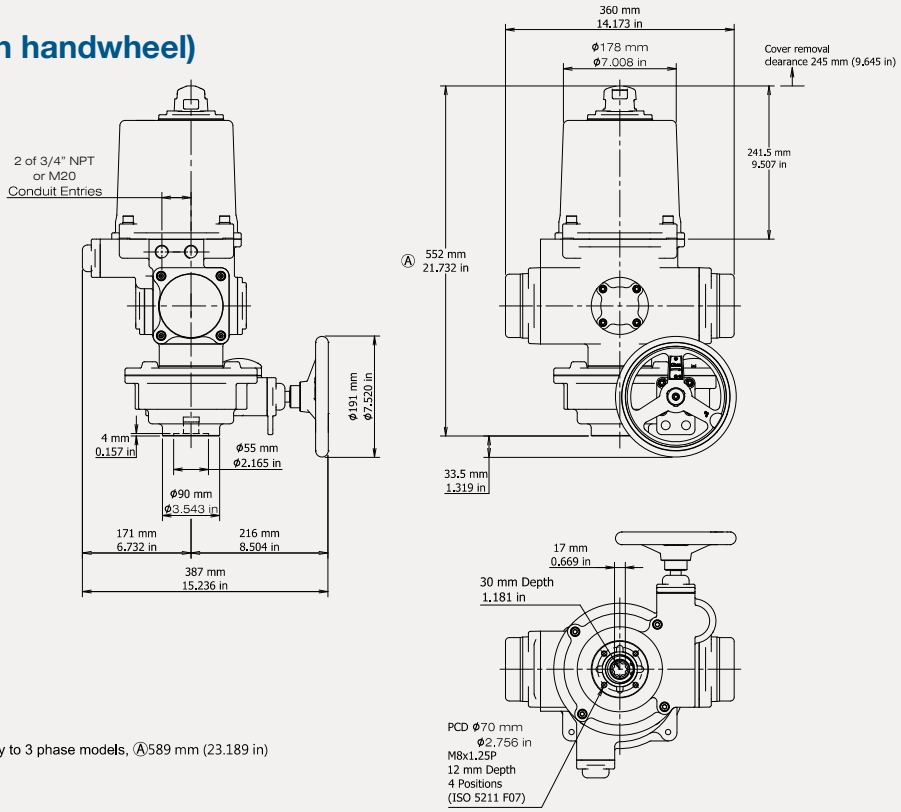


- Apply to 3 phase models, Ⓐ589 mm (23.189 in)

# Weather-Proof Outline Dimensions

## LQIFS 2

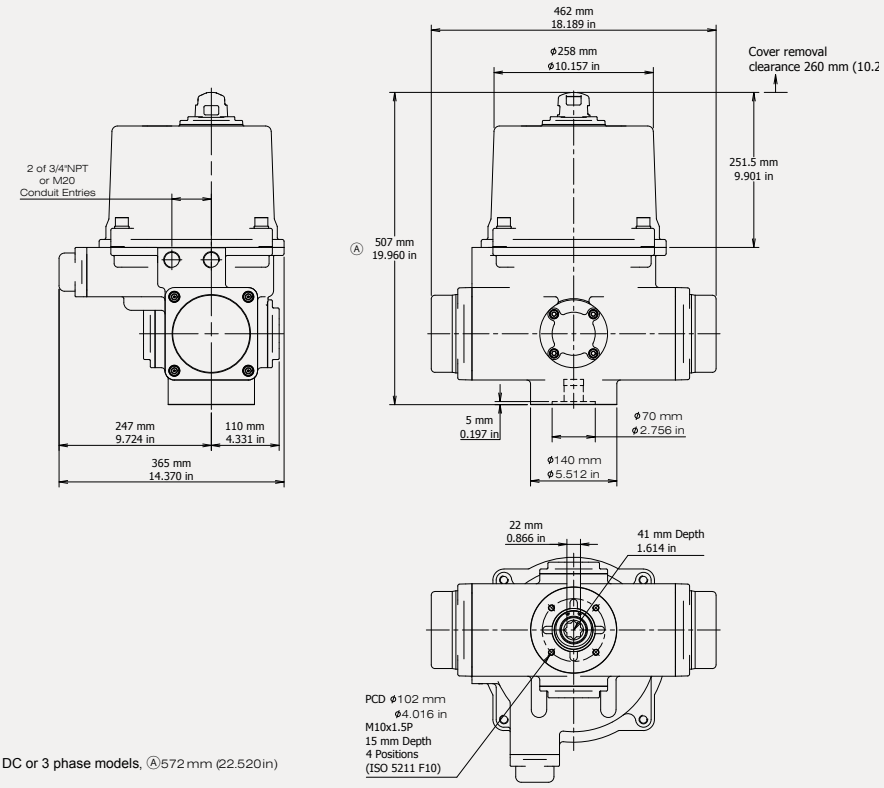


- Apply to DC or 3 phase models, Ⓐ572 mm (22.520in)

## LQIFS 2 (with handwheel)

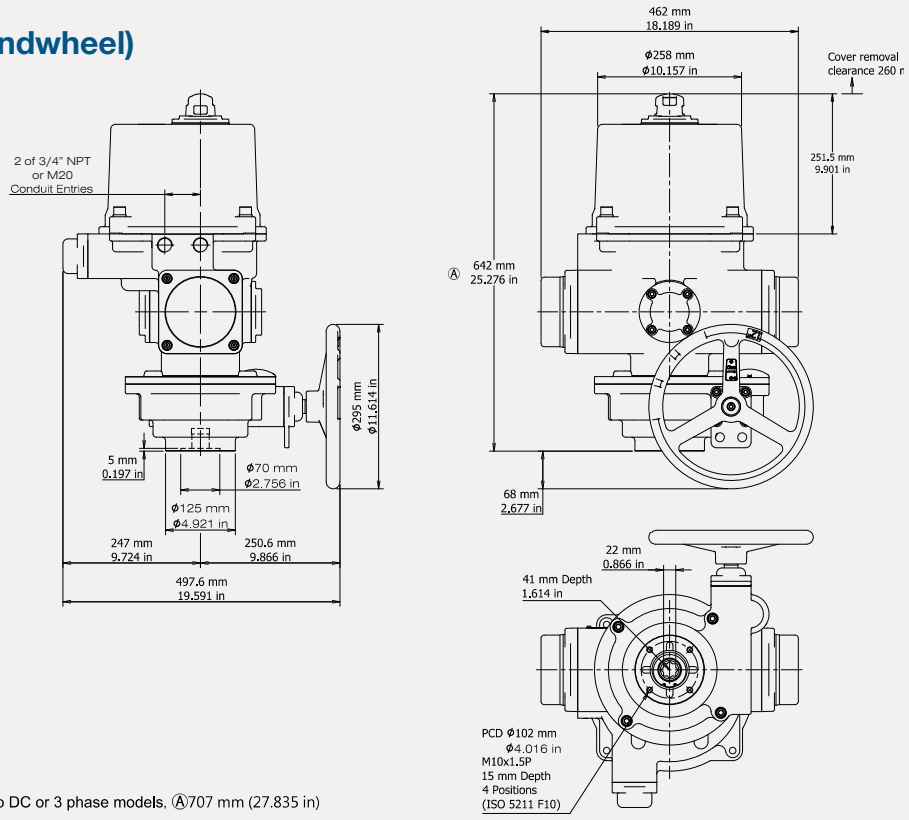


- Apply to DC or 3 phase models, Ⓐ707 mm (27.835 in)

# Weather-Proof Outline Dimensions

## LQIFS 3/4

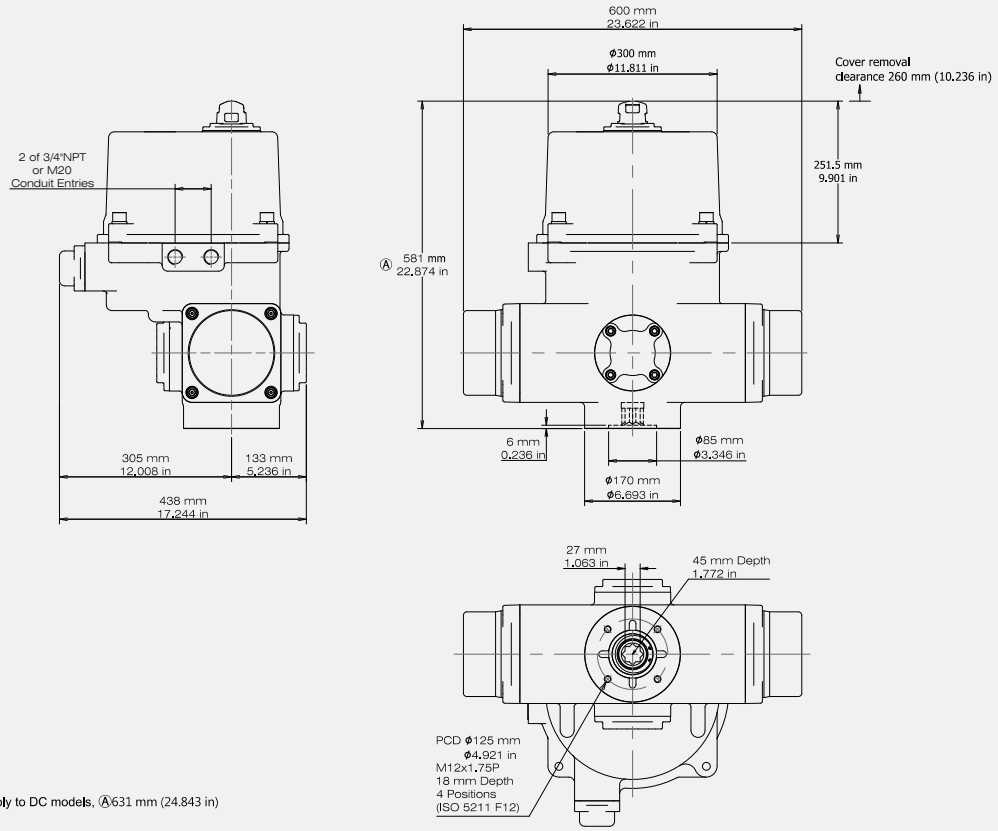


- Apply to DC models, Ⓐ631 mm (24.843 in)

## LQIFS 3/4 (with handwheel)

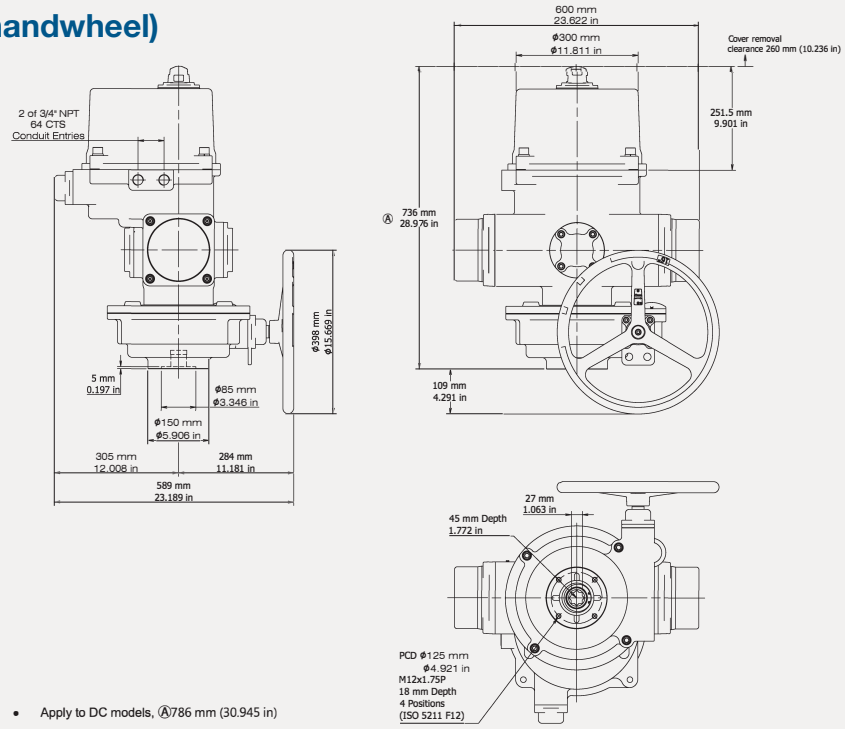


- Apply to DC models, Ⓐ786 mm (30.945 in)

# Weather-Proof Outline Dimensions

## LQIFS 5

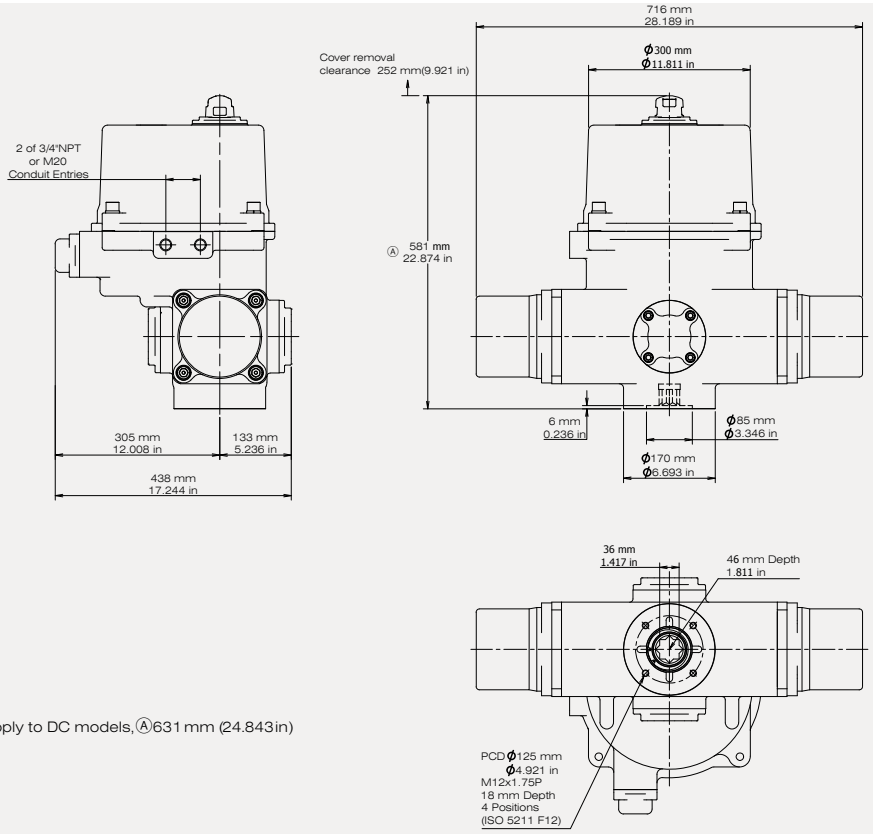


- Apply to DC models, Ⓐ631 mm (24.843in)

## LQIFS 5 (with handwheel)

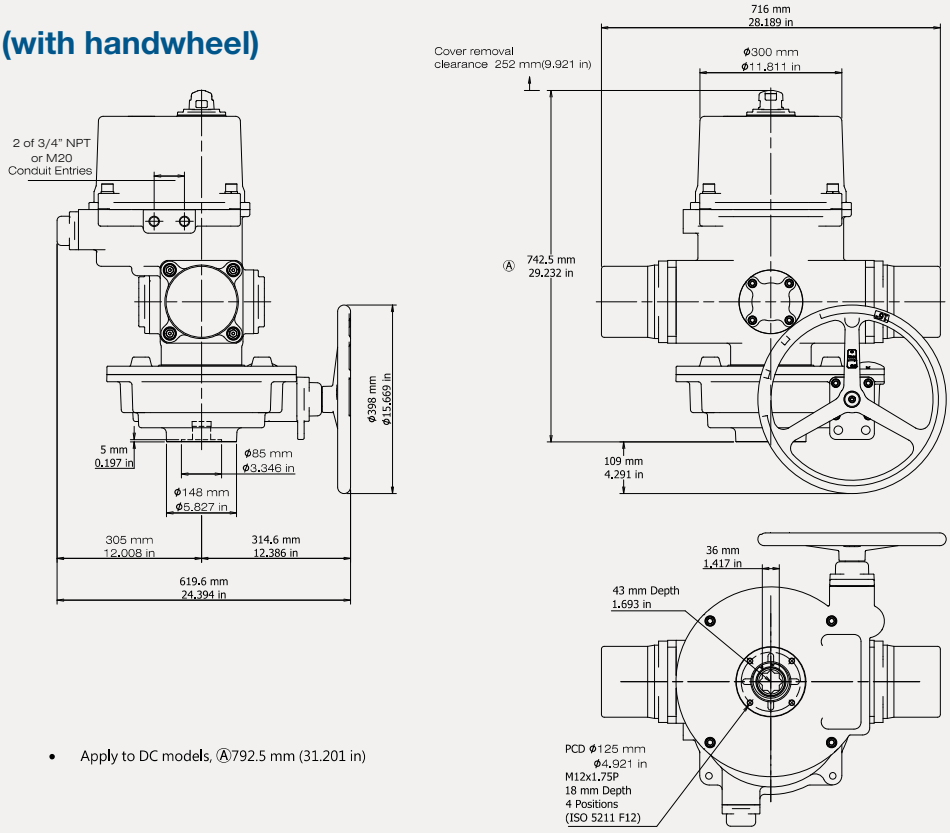


- Apply to DC models, Ⓐ792.5 mm (31.201 in)

# Explosion-Proof Outline Dimensions

## LQIFS 1

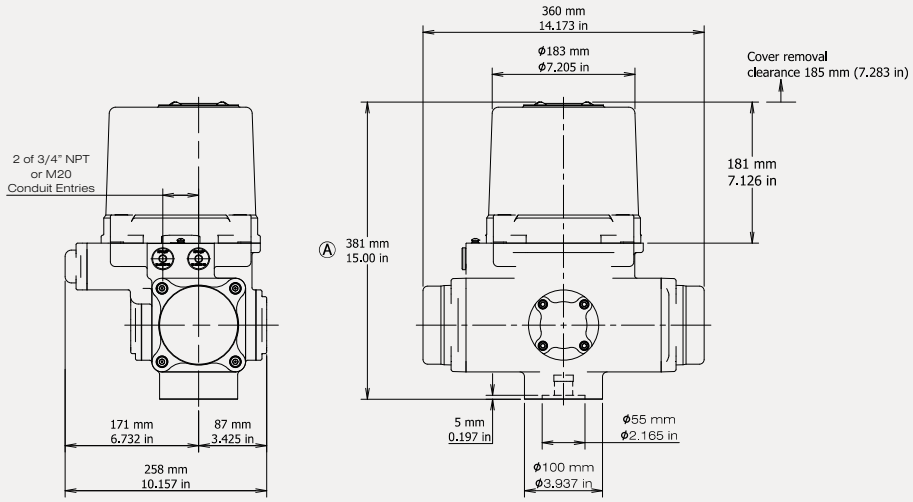


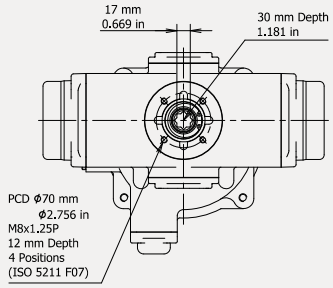


- Apply to DC models, Ⓐ418 mm (16.457 in)

## LQIFS 1 (with handwheel)

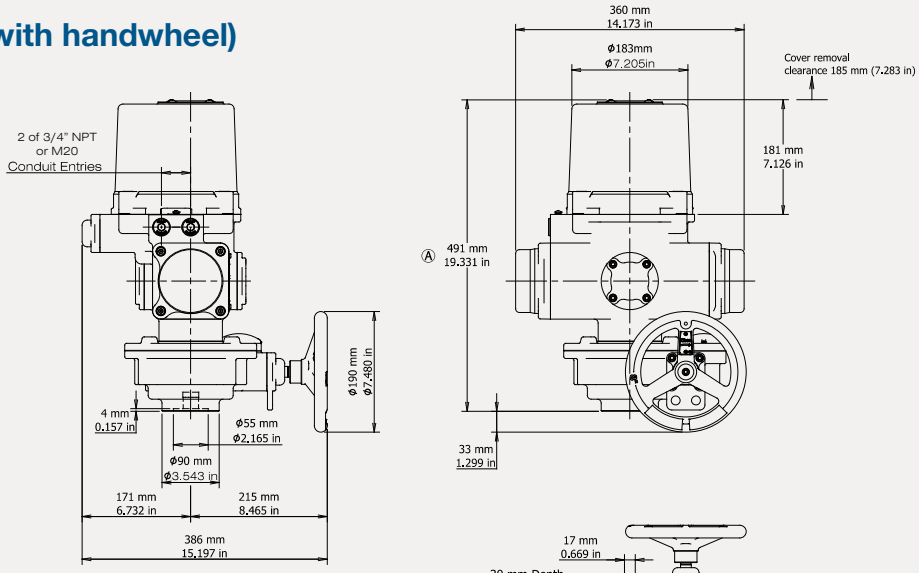


- Apply to DC models, Ⓐ528 mm (20.787 in)

# Explosion-Proof Outline Dimensions

## LQIFS 2

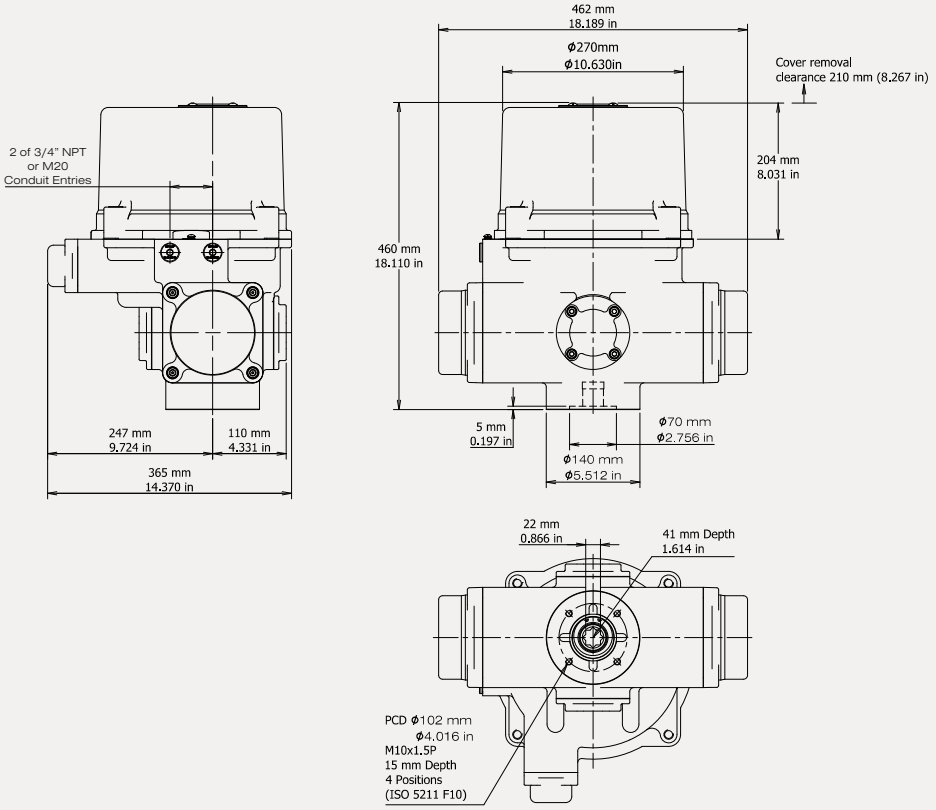


## LQIFS 2 (with handwheel)

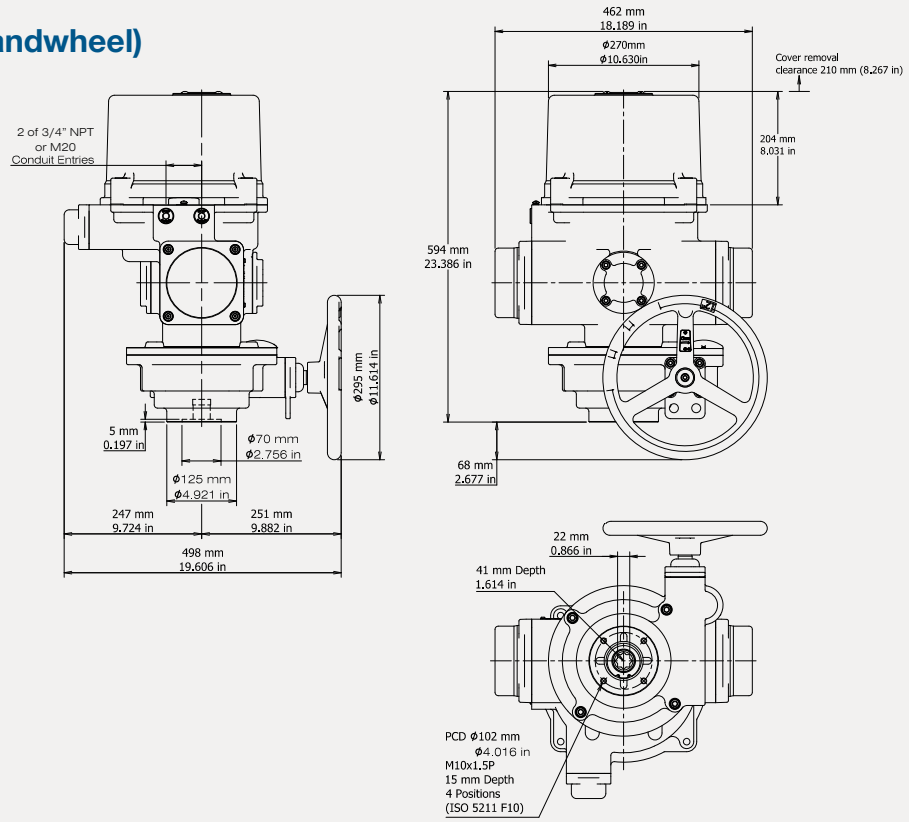

# Explosion-Proof Outline Dimensions

## LQIFS 3/4

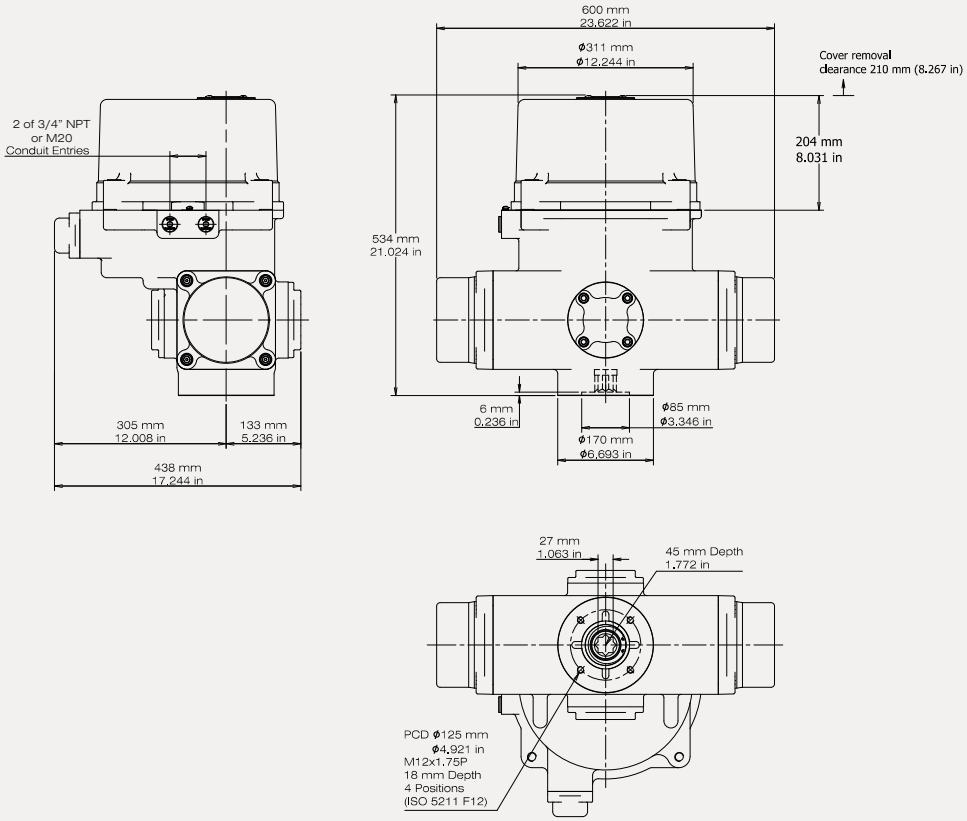


## LQIFS 3/4 (with handwheel)

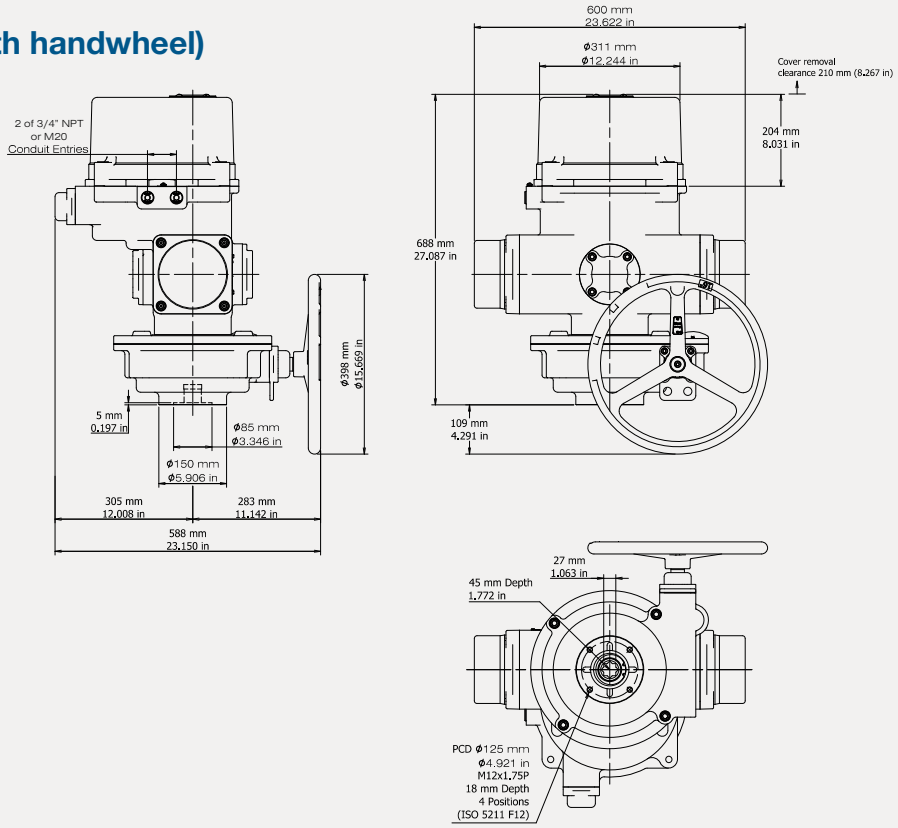

Flowserve Corporation
5215 North O'Connor Blvd.
Suite 700
Irving, Texas 75039-5421 USA

**AIBR003274 (EN/LTR)** February 2026

Flowserve Corporation has established industry leadership in the design and manufacture of its products. When properly selected, this Flowserve product is designed to perform its intended function safely during its useful life. However, the purchaser or user of Flowserve products should be aware that Flowserve products might be used in numerous applications under a wide variety of industrial service conditions. Although Flowserve can provide general guidelines, it cannot provide specific data and warnings for all possible applications. The purchaser/user must therefore assume the ultimate responsibility for the proper sizing and selection, installation, operation, and maintenance of Flowserve products. The purchaser/user should read and understand the Installation Instructions included with the product, and train its employees and contractors in the safe use of Flowserve products in connection with the specific application.

While the information and specifications contained in this literature are believed to be accurate, they are supplied for informative purposes only and should not be considered certified or as a guarantee of satisfactory results by reliance thereon. Nothing contained herein is to be construed as a warranty or guarantee, express or implied, regarding any matter with respect to this product. Because Flowserve is continually improving and upgrading its product design, the specifications, dimensions and information contained herein are subject to change without notice. Should any question arise concerning these provisions, the purchaser/user should contact Flowserve Corporation at any one of its worldwide operations or offices.

©2026 Flowserve Corporation. All rights reserved. This document contains registered and unregistered trademarks of Flowserve Corporation. Other company, product, or service names may be trademarks or service marks of their respective companies.