FLOWSERVE

USER INSTRUCTIONS

Worthington® HED/HED-DS centrifugal pumps

Double stage, double suction, radially split volute type centrifugal pumps

PCN=85392695 –01/16 (E) Original instructions

Installation
Operation
Maintenance

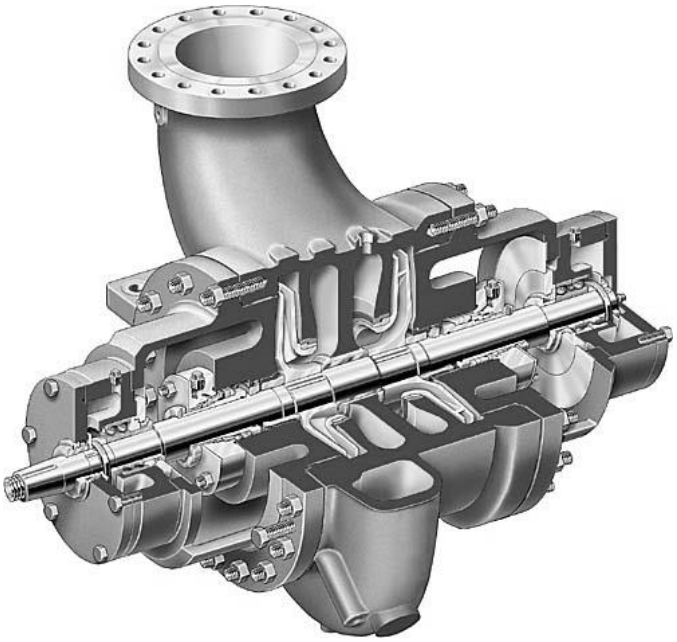

These instructions must be read prior to installing, operating, using and maintaining this equipment.

Experience In Motion

CONTENTS

PAGE

CONTENTS 2

1 INTRODUCTION AND SAFETY 4
1.1 General 4
1.2 CE marking and approvals 4
1.3 Disclaimer 4
1.4 Copyright 4
1.5 Duty conditions 4
1.6 Safety 5
1.7 Nameplate and safety labels 8
1.8 Specific machine performance 8
1.9 Noise level 8

2 TRANSPORT AND STORAGE 10
2.1 Consignment receipt and unpacking 10
2.2 Handling 10
2.3 Lifting 10
2.4 Storage 11
2.5 Recycling and end of product life 12

3 PUMP DESCRIPTION 13
3.1 Configurations 13
3.2 Nomenclature 13
3.3 Design of major parts 13
3.4 Performance and operating limits 14

4 INSTALLATION 15
4.1 Location 15
4.2 Part assemblies 15
4.3 Foundation 15
4.4 Grouting 17
4.5 Initial alignment 18
4.6 Piping 20
4.7 Final shaft alignment check 22
4.8 Electrical connections 22
4.9 Protection systems 22

5 COMMISSIONING, START-UP, OPERATION AND SHUTDOWN 23
5.1 Pre-commissioning procedure 23
5.2 Pump Lubricants 28
5.3 Direction of rotation 30
5.4 Guarding 31
5.5 Priming and auxiliary supplies 31
5.6 Starting the pump 31
5.7 Operating checks 31
5.8 Normal Start Up 33
5.9 Stopping the pump 33
5.10 Hydraulic, mechanical and 33
electrical duty 33

6 MAINTENANCE 33
6.1 General 33
6.2 Maintenance schedule 34
6.3 Spare parts 35

PAGE

6.4 Recommended spares (according to API) 35
6.5 Tools required 35
6.6 Fastener torques 36
6.7 Disassembly 37
6.8 Examination of parts 39
6.9 Assembly 42

7 FAULTS; CAUSES AND REMEDIES 45

8 PARTS LIST AND DRAWINGS 47

9 CERTIFICATION 62

10 OTHER RELEVANT DOCUMENTATION AND MANUALS 62
10.1 Supplementary User Instruction manuals 62
10.2 Change notes 62
10.3 Additional sources of information 62

INDEX

PAGE

Additional sources of information (10.3) 62
Alignment methods (4.5.2) 18
Assembly (6.9) 42
Associated equipment (2.4.1.5) 12
Avoiding excessive surface temperatures(1.6.4.3)7
Bearings (5.7.3) 32
CE marking and approvals (1.2) 4
Certification (9) 62
Change notes (10.2) 62
Commissioning, startup, operation (5) 23
Configurations (3.1) 13
Consignment receipt and unpacking (2.1) 10
Copyright (1.4) 4
Design of major parts (3.3) 13
Direction of rotation (5.3) 30
Disassembly (6.7) 37
Discharge piping (4.6.3) 21
Disclaimer (1.3) 4
Dismantling of thrust bearing (6.7.2) 38
Dismantling of line bearing (6.7.3) 38
Disassembly of rotor (6.7.4) 39
Duty conditions (1.5) 4
Electrical connections (4.8) 22
Examination of parts (6.8) 39
Fastener torques (6.6) 36
Faults; causes and remedies (7) 45
Foundation (4.3) 15
Grouting (4.4) 17
Guarding (5.4) 31
Handling (2.2) 10
Hydraulic, mechanical and electrical duty (5.10) .33
Initial alignment (4.5) 18
Installation (4) 15
Introduction and safety (1) 4
Inspection and maintenance (2.4.1.3) 11
Lifting (2.3) 10
Location (4.1) 15
Long term storage (2.4.1) 11
Lubrication (5.1.1) 23
Maintenance to avoid the hazard (1.6.4.7) 8
Maintenance (6) 33
Maintenance schedule (6.2) 34
Marking (1.6.4.2) 7
Mechanical seals (6.8.3) 40
Nameplate and safety labels (1.7) 8
Noise level (1.9) 8
Ordering of spares (6.3.1) 35
Other relevant documentation and manuals(10) 62
Parts list and Drawings (8) 47
Performance and operating limits (3.4) 14
Personnel qualification and training (1.6.2) 5
Piping (4.6) 20
Pressure and/or flow control (3.4.8) 15
Preventing the build up of explosive mix. (1.6.4.4)7
Preventing sparks (1.6.4.5) 8
Preventing leakage (1.6.4.6) 8
Products used in potentially explosive atm. (1.6.4)6
Protection systems (4.9) 22
Primary and auxiliary supplies (5.5) 31
Pump description (3) 13
Pumps with mechanical seals (4.6.5) 22
Recommended spares (6.4) 35
Recycling and end of product life (2.5) 12
Routine inspection (daily/weekly) (6.2.1) 34
Safety (1.6) 5
Safety action (1.6.3) 5
Safety labels (1.7.2) 8
Scope of compliance (1.6.4.1) 6
Spare parts (6.3) 35
Specific machine performance (1.8) 8
Starting the pump (5.6) 31
Stopping the pump (5.9) 33
Storage (2.4) 11
Storage of spares (6.3.2) 35
Suction piping (4.6.2) 21
Summary of safety markings (1.6.1) 5
Supplementary user instructions (10.1) 62
Thermal control (3.4.7) 15
Tools required (6.5) 35
Transport and storage (2) 10

1 INTRODUCTION AND SAFETY

1.1 General

⚠ ***These instructions must always be kept close to the product's operating location or directly with the product.***

Flowserve's products are designed, developed and manufactured with state-of-the-art technologies in modern facilities. The unit is produced with great care and commitment to continuous quality control, utilizing sophisticated quality techniques, and safety requirements.

Flowserve is committed to continuous quality improvement and being at service for any further information about the product in its installation and operation or about its support products, repair and diagnostic services.

These instructions are intended to facilitate familiarization with the product and its permitted use. Operating the product in compliance with these instructions is important to help ensure reliability in service and avoid risks. The instructions may not take into account local regulations; ensure such regulations are observed by all, including those installing the product. Always coordinate repair activity with operations personnel, and follow all plant safety requirements and applicable safety and health laws/regulations.

⚠ ***These instructions must be read prior to installing, operating, using and maintaining the equipment in any region worldwide. The equipment must not be put into service until all the conditions relating to safety, noted in the instructions, have been met. Failure to follow and apply the present user instructions is considered to be misuse. Personal injury, product damage, delay or failures caused by misuse are not covered by the Flowserve warranty.***

1.2 CE marking and approvals

It is a legal requirement that machinery and equipment put into service within certain regions of the world shall conform with the applicable CE Marking Directives covering Machinery and, where applicable, Low Voltage Equipment, Electromagnetic Compatibility (EMC), Pressure Equipment Directive (PED) and Equipment for Potentially Explosive Atmospheres (ATEX).
Where applicable, the Directives and any additional Approvals, cover important safety aspects relating to machinery and equipment and the satisfactory provision of technical documents and safety instructions. Where applicable this document incorporates information relevant to these Directives and Approvals. To confirm the Approvals applying and if the product is CE marked, check the serial number plate markings and the Certification, see section 9, Certification.

1.3 Disclaimer

Information in these User Instructions is believed to be reliable. In spite of all the efforts of Flowserve to provide sound and all necessary information the content of this manual may appear insufficient and is not guaranteed by Flowserve as to its completeness or accuracy.

Flowserve manufactures products to exacting International Quality Management System Standards as certified and audited by external Quality Assurance organisations. Genuine parts and accessories have been designed, tested and incorporated into the products to help ensure continued product quality and performance in use. As Flowserve cannot test parts and accessories sourced from other vendors the incorrect incorporation of such parts and accessories may adversely affect the performance and safety features of the products. The failure to properly select, install or use authorised Flowserve parts and accessories is considered to be misuse. Damage or failure caused by misuse is not covered by Flowserve's warranty. In addition, any modification of Flowserve products or removal of original components may impair the safety of these products in their use.

1.4 Copyright

All rights reserved. No part of these instructions may be reproduced, stored in a retrieval system or transmitted in any form or by any means without prior permission of Flowserve Corporation.

1.5 Duty conditions

This product has been selected to meet the specifications of your purchaser order. The acknowledgement of these conditions has been sent separately to the Purchaser. A copy should be kept with these instructions.

⚠ ***The product must not be operated beyond the parameters specified for the application. If there is any doubt as to the suitability of the product for the application intended, contact Flowserve for advice, quoting the serial number.***

If the conditions of service on your purchase order are going to be changed (for example liquid pumped, temperature or duty) it is requested that the user seeks Flowserve's written agreement before start up.

1.6 Safety

1.6.1 Summary of safety markings

These User Instructions contain specific safety markings where non-observance of an instruction would cause hazards. The specific safety markings are:

DANGER This symbol indicates electrical safety instructions where non-compliance will involve a high risk to personal safety or the loss of life.

This symbol indicates safety instructions where non-compliance would affect personal safety and could result in loss of life.

This symbol indicates "hazardous and toxic fluid" safety instructions where non-compliance would affect personal safety and could result in loss of life.

CAUTION This symbol indicates safety instructions where non-compliance will involve some risk to safe operation and personal safety and would damage the equipment or property.

This symbol indicates explosive atmosphere zone marking according to ATEX. It is used in safety instructions where non-compliance in the hazardous area would cause the risk of an explosion.

This symbol is used in safety instructions to remind not to rub non-metallic surfaces with a dry cloth; ensure cloth is damp. It is used where non-compliance in the hazardous area would cause the risk of an explosion.

Note: This sign is not a safety symbol but indicates an important instruction in the assembly process.

1.6.2 Personnel qualification and training

All personnel involved in the operation, installation, inspection and maintenance of the unit must be qualified to carry out the work involved. If the personnel in question do not already possess the necessary knowledge and skill, appropriate training and instruction must be provided. If required the operator may commission the manufacturer/supplier to provide applicable training.

Always coordinate repair activity with operations and health and safety personnel, and follow all plant safety requirements and applicable safety and health laws and regulations.

1.6.3 Safety action

This is a summary of conditions and actions to help prevent injury to personnel and damage to the environment and to equipment. For products used in potentially explosive atmospheres section 1.6.4 also applies.

CAUTION PREVENT EXCESSIVE EXTERNAL PIPE LOAD

Do not use pump as a support for piping. Do not mount expansion joints, unless allowed by Flowserve in writing, so that their force, due to internal pressure, acts on the pump flange.

CAUTION ENSURE CORRECT LUBRICATION

(See section 5, *Commissioning, startup, operation and shutdown*.)

CAUTION START THE PUMP WITH OUTLET VALVE PARTLY OPENED

(Unless otherwise instructed at a specific point in the User Instructions.)

This is recommended to minimize the risk of overloading and damaging the pump motor at full or zero flow. Pumps may be started with the valve further open only on installations where this situation cannot occur. The pump outlet control valve may need to be adjusted to comply with the duty following the run-up process. (See section 5, *Commissioning start-up, operation and shutdown*.)

CAUTION NEVER RUN THE PUMP DRY

CAUTION INLET VALVES TO BE FULLY OPEN WHEN PUMP IS RUNNING

Running the pump at zero flow or below the recommended minimum flow continuously will cause damage to the seal.

CAUTION DO NOT RUN THE PUMP AT ABNORMALLY HIGH OR LOW FLOW RATES

Operating at a flow rate higher than normal or at a flow rate with no backpressure on the pump may overload the motor and cause cavitation. Low flow rates may cause a reduction in pump/bearing life, overheating of the pump, instability and cavitation/vibration.

DANGER NEVER DO MAINTENANCE WORK WHEN THE UNIT IS CONNECTED TO POWER

HAZARDOUS LIQUIDS

When the pump is handling hazardous liquids care must be taken to avoid exposure to the liquid by appropriate siting of the pump, limiting personnel access and by operator training. If the liquid is flammable and/or explosive, strict safety procedures must be applied.

Gland packing must not be used when pumping hazardous liquids.

⚠ DRAIN THE PUMP AND ISOLATE PIPEWORK BEFORE DISMANTLING THE PUMP
The appropriate safety precautions should be taken where the pumped liquids are hazardous.

⚠ FLUORO-ELASTOMERS (When fitted.)
When a pump has experienced temperatures over 250 ºC (482 ºF), partial decomposition of fluoro-elastomers (example: Viton) will occur. In this condition these are extremely dangerous and skin contact must be avoided.

⚠ HANDLING COMPONENTS
Many precision parts have sharp corners and the wearing of appropriate safety gloves and equipment is required when handling these components. To lift heavy pieces above 25 kg (55 lb) use a crane appropriate for the mass and in accordance with current local regulations.

⚠ GUARDS MUST NOT BE REMOVED WHILE THE PUMP IS OPERATIONAL
The unit must not be operated unless coupling guard is in place. Failure to observe this warning could result in injury to operating personnel.

⚠ THERMAL SHOCK
Rapid changes in the temperature of the liquid within the pump can cause thermal shock, which can result in damage or breakage of components and should be avoided.

⚠ NEVER APPLY HEAT TO REMOVE IMPELLER
Trapped lubricant or vapour could cause an explosion.

⚠ HOT (and cold) PARTS
If hot or freezing components or auxiliary heating supplies can present a danger to operators and persons entering the immediate area action must be taken to avoid accidental contact. If complete protection is not possible, the machine access must be limited to maintenance staff only, with clear visual warnings and indicators to those entering the immediate area. Note: bearing housings must not be insulated and drive motors and bearings may be hot.

If the temperature is greater than 80 °C (175 °F) or below -5 °C (20 °F) in a restricted zone, or exceeds local regulations, action as above shall be taken.

1.6.4 Products used in potentially explosive atmospheres

Ex Measures are required to:

- Avoid excess temperature.
- Prevent build up of explosive mixtures.
- Prevent the generation of sparks.
- Prevent leakages.
- Maintain the pump to avoid hazard.

The following instructions for pumps and pump units when installed in potentially explosive atmospheres must be followed to help ensure explosion protection. Both electrical and non-electrical equipment must meet the requirements of European Directive Directive 2014/34/EU (previously 94/9/EC annex VIII which remains valid until 20 April 2016).

1.6.4.1 Scope of compliance

Ex Use equipment only in the zone for which it is appropriate. Always check that the driver, drive coupling assembly, seal and pump equipment are suitably rated and/or certified for the classification of the specific atmosphere in which they are to be installed.

Where Flowserve has supplied only the bare shaft pump, the Ex rating applies only to the pump. The party responsible for assembling the pump set shall select the coupling, driver and any additional equipment, with the necessary CE Certificate/ Declaration of Conformity establishing it is suitable for the area in which it is to be installed.

The output from a variable frequency drive (VFD) can cause additional heating affects in the motor and so, for pumps sets with a VFD, the ATEX Certification for the motor must state that it is covers the situation where electrical supply is from the VFD. This particular requirement still applies even if the VFD is in a safe area.

1.6.4.2 Marking

An example of ATEX equipment marking is shown below. The actual classification of the pump will be engraved on the nameplate.

II 2 GD c IIC 135 ºC (T4)

Equipment Group
I = Mining
II = Non-mining

Category
2 or M2 = High level protection
3 = normal level of protection

Gas and/or Dust
G = Gas; D = Dust

C = Constructional safety
(in accordance with En13463-5)

Gas Group (*Equipment Category 2 only*)
IIA – Propane (typical)
IIB – Ethylene (typical)
IIC – Hydrogen (typical)

Maximum surface temperature (Temperature Class)
(See section 1.6.4.3.)

1.6.4.3 Avoiding excessive surface temperatures

ENSURE THE EQUIPMENT TEMPERATURE CLASS IS SUITABLE FOR THE HAZARD ZONE

Pumps have a temperature class as stated in the ATEX Ex rating on the nameplate. These are based on a maximum ambient of 40 °C (104 °F); refer to Flowserve for higher ambient temperatures.

The surface temperature on the pump is influenced by the temperature of the liquid handled. The maximum permissible liquid temperature depends on the temperature class and must not exceed the values in the table that follows.

The temperature rise at the seals and bearings and due to the minimum permitted flow rate is taken into account in the temperatures stated.

Temperature class to EN 13463-1	Maximum surface temperature permitted	Temperature limit of liquid handled (* depending on material and construction variant - check which is lower)
T6	85 °C (185 °F)	Consult Flowserve
T5	100 °C (212 °F)	Consult Flowserve
T4	135 °C (275 °F)	115 °C (239 °F) *
T3	200 °C (392 °F)	180 °C (356 °F) *
T2	300 °C (572 °F)	275 °C (527 °F) *
T1	450 °C (842 °F)	400 °C (752 °F) *

The responsibility for compliance with the specified maximum liquid temperature is with the plant operator.

Temperature classification “Tx” is used when the liquid temperature varies and the pump could be installed in different hazardous atmospheres. In this case the user is responsible for ensuring that the pump surface temperature does not exceed that permitted in its actual installed location.

If an explosive atmosphere exists during the installation, do not attempt to check the direction of rotation by starting the pump unfilled. Even a short run time may give a high temperature resulting from contact between rotating and stationary components.

Where there is any risk of the pump being run against a closed valve generating high liquid and casing external surface temperatures it is recommended that users fit an external surface temperature protection device.

Avoid mechanical, hydraulic or electrical overload by using motor overload trips, temperature monitor or a power monitor and make routine vibration monitoring checks.

In dirty or dusty environments, regular checks must be made and dirt removed from areas around close clearances, bearing housings and motors.

1.6.4.4 Preventing the build up of explosive mixtures

ENSURE THE PUMP IS PROPERLY FILLED AND VENTED AND DOES NOT RUN DRY.

Ensure the pump and relevant suction and discharge pipeline system is totally filled with liquid at all times during the pump operation, so that an explosive atmosphere is prevented. In addition it is essential to make sure that seal chambers, auxiliary shaft seal systems and any heating and cooling systems are properly filled.

If the operation of the system cannot avoid this condition the fitting of an appropriate dry run protection device is recommended (eg liquid detection or a power monitor).
To avoid potential hazards from fugitive emissions of vapour or gas to atmosphere the surrounding area must be well ventilated.

1.6.4.5 Preventing sparks

To prevent a potential hazard from mechanical contact, the coupling guard must be non-sparking and anti-static for Category 2.

To avoid the potential hazard from random induced current generating a spark, the earth contact on the base plate must be used.
Avoid electrostatic charge: do not rub non-metallic surfaces with a dry cloth ensure cloth is damp.
The coupling must be selected to comply with 2006/42/EC and correct alignment must be maintained.

1.6.4.6 Preventing leakage

The pump must only be used to handle liquids for which it has been approved to have the correct corrosion resistance.
Avoid entrapment of liquid in the pump and associated piping due to closing of suction and discharge valves, which could cause dangerous excessive pressures to occur if there is heat input to the liquid. This can occur if the pump is stationary or running.
Bursting of liquid containing parts due to freezing must be avoided by draining or protecting the pump and ancillary systems.
Where there is the potential hazard of a loss of a seal barrier fluid or external flush, the fluid must be monitored.
If leakage of liquid to atmosphere can result in a hazard, the installation of a liquid detection device is recommended.

1.6.4.7 Maintenance to avoid the hazard

CORRECT MAINTENANCE IS REQUIRED TO AVOID POTENTIAL HAZARDS WHICH GIVE A RISK OF EXPLOSION

The responsibility for compliance with maintenance instructions is with the plant operator.

To avoid potential explosion hazards during maintenance, the tools, cleaning and painting materials used must not give rise to sparking or adversely affect the ambient conditions. Where there is a risk from such tools or materials; maintenance must be conducted in a safe area.
It is recommended that a maintenance plan and schedule is adopted. (See section 6, *Maintenance.)*

1.7 Nameplate and safety labels

1.7.1 Nameplate

For details of nameplate, see the *Declaration of Conformity,* or separate documentation included with these User Instructions.

1.7.2 Safety labels

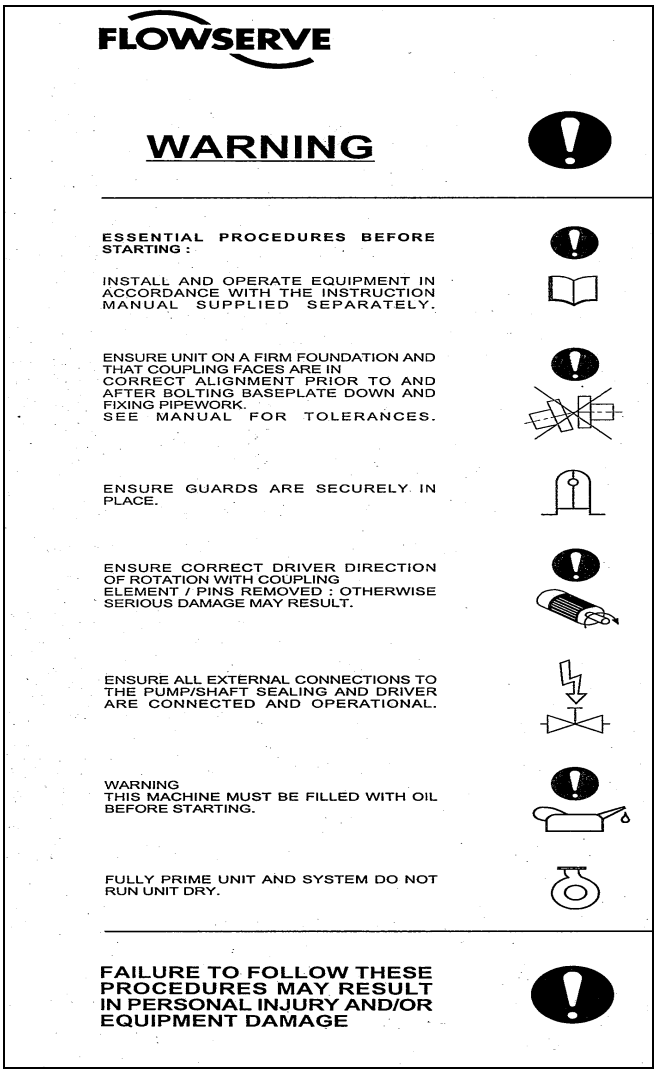

1.8 Specific machine performance

For performance parameters see section 1.5, *Duty conditions*. Pump performance data are summarised on pump data sheet which is included in proper section of “Job User’s Instruction”.

1.9 Noise level

When pump noise level exceeds 85 dBA attention must be given to prevailing Health and Safety Legislation, to limit the exposure of plant operating personnel to the noise. The usual approach is to control exposure time to the noise or to enclose the

machine to reduce emitted sound. You may have already specified a limiting noise level when the equipment was ordered, however if no noise requirements were defined then machines above a certain power level will exceed 85 dBA. In such situations consideration must be given to the fitting of an acoustic enclosure to meet local regulations.

Pump noise level is dependent on a number of factors - the type of motor fitted, the operating conditions, pipework design and acoustic characteristics of the building. The levels specified in the table 1.1 are estimated and not guaranteed.

The dBA values are based on the noisiest ungeared electric motors that are likely to be encountered. They are Sound Pressure levels at 1 m (3.3 ft) from the directly driven pump, for "free field over a reflecting plane".

If a pump unit only has been purchased, for fitting with your own driver, then the "pump only" noise levels should be combined with the level for the driver obtained from the supplier. If the motor is driven by an inverter, it may show an increase in noise level at some speeds. Consult a Noise Specialist for the combined calculation.

For units driven by equipment other than electric motors or units contained within enclosures, see the accompanying information sheets and manuals.

Typical sound pressure level, dBA, L_{pA} at 1 m reference 20 µPa (L_{wA} sound power 1pW where L_{pA} >85 dBA)

Motor size and speed		3500 rpm		2900 rpm		1750 rpm		1450 rpm	
kW	**(hp)**	Pump only **dBA**	Pump & motor **dBA**	Pump only **dBA**	Pump & motor **dBA**	Pump only **dBA**	Pump & motor **dBA**	Pump only **dBA**	Pump & motor **dBA**
<0.55	(<0.75)	72	72	64	65	62	64	62	64
0.75	(1)	72	72	64	66	62	64	62	64
1.1	(1.5)	74	74	66	67	64	64	62	63
1.5	(2)	74	74	66	71	64	64	62	63
2.2	(3)	75	76	68	72	65	66	63	64
3	(4)	75	76	70	73	65	66	63	64
4	(5)	75	76	71	73	65	66	63	64
5.5	(7.5)	76	77	72	75	66	67	64	65
7.5	(10)	76	77	72	75	66	67	64	65
11	(15)	80	81	76	78	70	71	68	69
15	(20)	80	81	76	78	70	71	68	69
18.5	(25)	81	81	77	78	71	71	69	71
22	(30)	81	81	77	79	71	71	69	71
30	(40)	83	83	79	81	73	73	71	73
37	(50)	83	83	79	81	73	73	71	73
45	(60)	86	86	82	84	76	76	74	76
55	(75)	86	86	82	84	76	76	74	76
75	(100)	87	87	83	85	77	77	75	77
90	(120)	87	88	83	85	77	78	75	78
110	(150)	89	90	85	87	79	80	77	80
132	(175)	89	90	85	87	79	80	77	80
150	(200)	89	90	85	87	79	80	77	80
160	(215)	(1)	(1)	(1)	(1)	83	84	81	83
200	(270)	(1)	(1)	(1)	(1)	85	87	83	85
300	(400)					87	90	85	86
315	(422)					87	90	85	86
355	(475)					87	90	86	87
500	(670)					88	(1)	86	(1)
1000	(1300)					90	(1)	88	(1)
1500	(2000)					90	(1)	90	(1)

(1) Noise levels of machines in this range should be based on actual equipment selected
For 1180 and 960 r/min reduce the 1450 r/min values by 2dBA
For 880 and 720 r/min reduce the 1450 r/min values by 3dBA

2 TRANSPORT AND STORAGE

2.1 Consignment receipt and unpacking

Immediately after receipt of the equipment it must be checked against the delivery and shipping documents for its completeness and that there has been no damage in transportation.

Any shortage and or damage must be reported immediately to Flowserve and received in writing within one month of receipt of the equipment. Later claims cannot be accepted.

Check any crates, boxes and wrappings for any accessories or spare parts which may be packed separately with the equipment or attached to side walls of the box or equipment.

Each product has a unique serial number. Check that this number corresponds with that advised and always quote this number in correspondence as well as when ordering spare parts or further accessories.

2.2 Handling

2.2.1 General instructions concerning handling

Boxes, crates, pallets or cartons may be unloaded using forklift vehicles or slings dependent on their size and construction.

To lift machines or pieces with one or several suspension rings, only use hooks and chains in compliance with the local regulations concerning safety. Never put cables, chains or ropes directly on or in the suspension rings. Cables, chains or lifting ropes must never present excessive bending.

Never bend the lifting hooks, suspension rings, chains, etc., which should only be made to endure stresses within, calculated limits. Remember that the capacity of a lifting device decreases when the direction of the lifting force direction makes an angle with the device axis.

To increase the safety and the efficiency of the lifting device, all the lifting elements must be as perpendicular as possible. If necessary a lifting beam can be placed between the winch and the load.
When heavy pieces are lifted up, never stay or work under the load or in the area, which could be in the path of the load if it were to swing or fall away.

Never leave a load hanging from a winch. The acceleration or the slowing-down of lifting equipment must stay in the safety limits for the staff.

A winch must be positioned in such a way that the load will be raised perpendicularly. Where possible necessary precautions must be taken to avoid the swing of the load, using for example two winches making approximately the same angle, below 30°, with the vertical.

2.3 Lifting

CAUTION Make sure that any equipment used to lift the pump or any of its components is capable of supporting the weights encountered. Make sure that all parts are correctly rigged before attempting to lift.

⚠ A crane must be used for all pump sets in excess of 25 kg (55 lb). Fully trained personnel must carry out lifting, in accordance with local regulations. The driver and pump weights are recorded on general arrangement drawing included into the job user's instruction.

2.3.1 To Lift unit

Pump, driver and baseplate can be lifted as a unit. Sling from all four (4) eye bolts provided on baseplate side rails. Failure to use all four (4) could result in permanent distortion of the baseplate. Use as long a sling as possible, or use a spreader arrangement.

CAUTION ***Coupling bolting and spacer piece must be removed from between pump and driver half couplings before lifting baseplate with pumping element.***
To lift pump and baseplate, less driver, or baseplate alone, sling from all four (4) eye bolts.

CAUTION ***Do not lift pump, motor, base plate unit by slinging from pump casing and/or eye bolt on motor.***

2.3.2 To lift driver

Refer to Manufacturers Instructions.

2.3.3 To lift complete pump only

Rig lifting straps at coupling end bearing bracket and outboard bearing bracket. Make sure straps are adjusted to obtain an even lift.

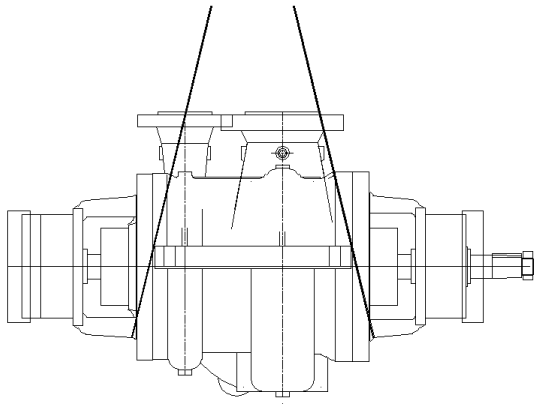

2.4 Storage

CAUTION Store the pump in a clean, dry location away from vibration. Leave piping connection covers in place to keep dirt and other foreign material out of pump casing. Turn pump at intervals to prevent brinelling of the bearings and the seal faces, if fitted, from sticking.
Electric Motors (Pump Driver) should not be stored in damp places without special protection (Refer to Motor manufacturers instructions).

The pump may be stored as above for up to 6 months.

2.4.1 Long term storage

During extended periods of storage prior to installation, precautions must be taken to protect the pump from deterioration. The various parts of the pump are protected prior to shipment by applying varying grades of preservative to the parts. However, during shipment and handling the preservatives are subjected to conditions that can cause their removal. Also, during extended periods of time the preservatives may deteriorate. The listed procedures (2.4.1.1 to 2.4.1.5) should be followed to prevent deterioration of the pump during the extended storage period. These procedures may also be supplemented by the experience of the person(s) performing the tasks.

2.4.1.1 Inspection upon arrival

When the pump is received it should be inspected for damage or other signs of rough handling. If any damage is found it should be reported to the carrier immediately. Inspect the preservative coating on various parts. If necessary, renew preservative in areas where it has been rubbed or scraped.
Inspect all painted surfaces. If necessary, touch up the areas where paint has been chipped or scraped.
Inspect all covers over pump openings and piping connections. If covers or seals for the covers are damaged or loose, they are to be removed, and a visual inspection made of the accessible interior areas for accumulation of foreign materials or water. If necessary, clean and preserve the interior parts as noted above to restore the parts to the "as shipped" condition. Install or replace covers and fasten securely.

2.4.1.2 Storage

CAUTION If at all possible, the pump and its component parts should be stored indoors where they will be protected from the elements. In no case should any pump element be subjected to extended periods of submergence or wetting prior to start up. If it is not possible to store the pump and its components indoors, precautions must be taken to protect them from the elements. Regardless of whether storage is indoors or outside, the storage area should be vibration free. All boxes marked for indoor storage should be stored indoors. When stored outdoors the pump and its components should be protected from dirt, dust, rain, snow, or other unfavourable conditions by heavy plastic sheets, canvas, waterproof burlap or other suitable coverings. All equipment must be placed upon skids or blocks to prevent contact with the ground and surface contaminants. Equipment must be adequately supported to prevent distortion and bending.
The pump shaft should be rotated, in the direction of rotation, at least 1 and 1/4 turns each week during the storage period and any other periods of stand by.
When selecting a storage area the following should be taken into
consideration.

a) The deterioration of the equipment will be proportionate to the class of storage provided.
b) The expenses involved in restoring the equipment at time of installation will be proportionate to the class of storage provided.

2.4.1.3 Inspection and maintenance

The stored equipment has to be placed on a periodic inspection schedule by the purchaser.
The responsibility for setting up an inspection schedule rests with the purchaser and will be dependent upon the class of storage provided. It would be expected initially, inspection would occur weekly, then depending upon the inspection reports being favourable or unfavourable, inspection would continue weekly, monthly, or quarterly, as may be determined.

Each inspection should consist of a general surface inspection to assure that:

a) Pump supports are firmly in place.
b) Pump covers over openings are firmly in place.
c) Pump coverings, plastic or tarps are firmly in place. Any holes or tears must be repaired to prevent entrance of dirt or water.
d) Pump covers are periodically removed from openings and interior accessible areas inspected. If surface rusting has occurred, clean or coat with preservative.
e) If rusting occurs on exterior surfaces clean and repaint or coat with preservative.
f) Check individually wrapped parts for signs of deterioration. If necessary, renew preservative and wrapping.

Six months prior to the scheduled installation date, a FLOWSERVE representative is to be employed to conduct an inspection. This inspection may include, not necessarily in its entirety and not limited to the following:

a) An inspection of all periodic inspection records as kept on file by the purchaser, and all inspection reports that have been compiled during the storage period.
b) An inspection of the storage area to determine the "as stored" condition of the equipment prior to any protection covers being removed.
c) An inspection of the equipment with protective covers and flange covers removed.
d) Depending upon the length of time the equipment was stored, the type of storage provided (i.e. Indoor: heated, unheated, ground floor, concrete floor. Outdoors: under roof, no roof, waterproof coverings, on concrete, on ground) and as a result of the inspection of (a),(b) & (c) above the FLOWSERVE representative may require a partial or complete dismantling of the equipment.
e) Dismantling may necessitate restoration of painted or preserved surfaces, and, or replacement of gaskets, "O" rings, packing and bearings.
f) All costs involved during inspection, dismantling, restoration, replacement of parts and reassembly will have to the accounted to the purchaser. All necessary labour, tools and cranes will be supplied by the purchaser.

Upon completion of the inspection the FLOWSERVE representative shall submit a report to the purchaser, and to the Manager of Customer Service, stating in detail the results of the inspection.

One month prior to installation of the equipment, a FLOWSERVE representative is to be employed to conduct a final inspection.
This inspection will be made to assure that the requirements of the six months inspection report were satisfactorily completed and that the equipment is ready for installation.
Upon completion of this inspection the FLOWSERVE representative shall submit a final report to the purchaser, and to the Manager of Customer Service, advising the results of the final inspection.
All costs involved in conducting the final inspection will have to the accounted to the purchaser.
Prior to and during start up, any requirements for the services of an FLOWSERVE representative will revert back to the original contract agreement for equipment purchased, with revised costing.

2.4.1.4 Painting and preservation

Paints and preservatives used are either FLOWSERVE standard or 'special' as required by the contract specification. Refer to FLOWSERVE for the description of paints and preservatives used on this order if needed.

2.4.1.5 Associated equipment

Motors, Turbines, Gears, etc., being supplied by FLOWSERVE.
Generally rotors of associated equipment should be blocked to relieve bearing loads. Storage should be indoors and dry. See the specific manufacturers storage requirements.

2.5 Recycling and end of product life

At the end of the service life of the product or its parts, the relevant materials and parts should be recycled or disposed of using an environmentally acceptable method and local regulations. If the product contains substances which are harmful to the environment, these should be removed and disposed of in accordance with current regulations. This also includes the liquids and or gases in the "seal system" or other utilities.

Make sure that hazardous substances or toxic fluids are disposed of safely and that the correct personal protective equipment is used. The safety specifications must be in accordance with the current regulations at all times.

3 PUMP DESCRIPTION

3.1 Configurations

HED pumps are horizontal two stage, radially split, top/top flanged, between bearings centerline mounted for heavy duty process services in full compliance with API 610 standard. All sizes are suitable for both 50 and 60 cycle operation. To reduce NPSH requirements the HED can be fitted with an inducer in front of the first impeller (HED-I) or with a double suction first stage (HED-DS).

3.2 Nomenclature

The pump size will be engraved on the nameplate typically as below:

6-HED-17-A

Nominal discharge branch size

Pump type

Nominal full size impeller diameter

Casing pattern type

The typical nomenclature above is the general guide to the HED/HED-DS description. Identify the actual pump size and serial number from the pump nameplate. Check that this agrees with the applicable certification provided.

3.3 Design of major parts

3.3.1 Pump casing

The casing is radially split with top suction and discharge nozzles integrally cast.

This construction simplifies piping layout reducing space requirements. Side/side or side/top arrangements are available on request for particular applications.

The mounting is centerline to retain alignment even at elevated temperatures, permitting equal expansion in all directions, and to give positive support to the pump.

The first and second stage single volutes are opposed to reduce hydraulic radial thrust and shaft deflection, and the liquid is conveyed from the one to the other by an integral cast crossover. The interstage diaphragm too is integrally cast with the casing. All the flow passages are accurately designed to minimize efficiency losses.

3.3.2 Impeller

The standard impellers, single suction of the closed type, are keyed to the shaft and secured by positive locking devices. They are mounted face to face to balance the hydraulic axial forces.

Impellers first and then the complete rotor are dynamically balanced to avoid vibrations and assure long trouble free life to seals and bearings.

Ceramic core castings are used to assure smooth passages and the highest efficiency. Large eye areas and low-entrance velocities give the pump very low NPSH requirements, when extremely low NPSH requirements are encountered, HED pumps can be fitted with an inducer or with a double suction first stage impeller.

Some pump sizes have more than one impeller design, with differentiated B.E.P. capacities, for maximum flexibility and operation with high efficiencies throughout the coverage.

3.3.3 Wearing Rings

The casing and the impellers are fitted with replaceable wear rings of hardened material. The rings are held in place by a press fit with locking pins on the casing and with threaded dowels on the impellers.

3.3.4 Rotors

Rotors are of the stiff shaft design.

Shafts are of ample diameter, combined with the minimum bearing span to minimize shaft deflectors especially when the pump is operating at off peak conditions.

Shafts are designed to meet API 610 deflection and vibration requirements. Fully assembled rotors are dynamically balanced can accommodate a wide variety of single or dual seal arrangements as standard.

3.3.5 Casing Covers

Two covers, one full size at the outboard pump end which permits rotor removal and one reduced size cover at inboard end provide circular type joints and easy pump sealing with confined gaskets.

The metal to metal fit with confined controlled compression gasket insures proper alignment between casing and cover.

3.3.6 Bearing Housings

HED/HED-DS pumps are fitted as standard with antifriction bearings. The radial bearing is a deep groove type, while the thrust bearings are dual single row angular contact type.

Lubrication is provided by an oil slinger in conjunction with a TRICO constant level oiler, both provided as standard. In case of particularly severe operating conditions sleeve line with antifriction or tilting pad thrust bearing are available with self-contained or external lube system.

Special bearing isolators (INPROSEAL or equivalent) are available on request. Bearing housings can also be adapted for optional oil mist or purge mist lubrication systems.

3.3.7 Shaft seals
The mechanical seals, attached to the pump shaft, seals the pumped liquid from the environment.

3.3.8 Driver
The driver is normally an electric motor. Different drive configurations may be fitted such as internal combustion engines, turbines, hydraulic motors etc driving via couplings, belts, gearboxes etc.

3.3.9 Coupling/Coupling guards
Flexible spacer couplings are provided in various makes and models to suit customer preference.
(Aluminium non- hinged guards are provided).

3.3.10 Baseplate
Standard baseplates are welded steel, drain pan type in conformance with API 610 standardized dimensions. Horizontal driver alignment screws and vertical baseplate leveling screws are provided when required by API.
Special baseplates can be supplied to suit individual installation circumstances.

3.3.11 Accessories
Accessories may be fitted when specified by the customer.
Baseplates are fabricated and machined so to guarantee the flatness and parallelism of pads as required by API standard. The requirement is met by supporting and clamping the baseplate at the foundation bolt holes only.

3.4 Performance and operating limits

This product has been selected to meet the specifications of your purchase order see section 1.5. These pumps are furnished for a particular service condition. Changes in the hydraulic system may affect the pump's performance adversely.
This is especially true if the changes reduce the pressure at the suction flange or if the liquid temperature is increased. In case of doubt, contact the nearest FLOWSERVE office.

3.4.1 Effect of specific gravity
Pump capacity and total head in meters (feet) do not change with SG, however pressure displayed on a pressure gauge is directly proportional to SG. Power absorbed is also directly proportional to SG. It is therefore important to check that any change in SG will not overload the pump driver or over-pressurize the pump.

3.4.2 Effects of viscosity
The pump is designed to deliver rated capacity and rated head for a liquid with a particular viscosity.
For a given flow rate the total head reduces with increased viscosity and increases with reduced viscosity. Also for a given flow rate the power absorbed increases with increased viscosity, and reduces with reduced viscosity.
When contemplating operation at some viscosity other than the one for which the pump was originally designed and/or applied, the changed conditions should be referred to FLOWSERVE for recommendations.

CAUTION ***When pump is handling heavy viscous liquid, the temperature of the liquid must allow it to be pumped easily. Liquid may have to be heated prior to pump start-up.***

3.4.3 Changing the pump speed
Changing pump speed effects flow, total head, power absorbed, $NPSH_R$, noise and vibration. Flow varies in direct proportion to pump speed. Head varies as speed ratio squared. Power varies as speed ratio cubed. If increasing speed it is important therefore to ensure the maximum pump working pressure is not exceeded, the driver is not overloaded, $NPSH_A > NPSH_R$, and that noise and vibration are within local requirements and regulations.

3.4.4 Net Positive Suction Head (NPSH)
Any liquid, hot or cold, must be pushed into the impeller of the pump by absolute pressure, such as the atmospheric or vessel pressure from which the pump takes its suction.
The head in feet of liquid necessary to push the required flow into the pump is called Net Positive Suction Head. This value, more commonly called NPSH, is measured above the vapour pressure of the liquid at the pumping temperature.
There are two kinds of NPSH: the $NPSH_R$ is the head required by the pump to cover the losses in the pump suction - that is shown on the pump characteristic curve.
The second, $NPSH_A$, is the head available in the system, taking into account friction loss in suction piping, valves, fittings etc. In all cases the $NPSH_A$, measured above vapour pressure, must exceed the $NPSH_R$ in order to push the liquid into the pump. Failure to have this will result in both bad performance and mechanical damage to the pump, and in certain cases actual pump failure.

If any change in $NPSH_A$ is proposed, ensure its margin over $NPSH_R$ is not significantly eroded. Refer to the pump performance curve to determine exact requirements particularly if flow has changed. If in doubt please consult your nearest Flowserve office for advice and details of the minimum allowable margin for your application.

3.4.5 Minimum Continuous Stable Flow

The Minimum Continuous Stable Flow for the pump is stated on the Data sheet.

3.4.6 Minimum flow control

In all cases, it is the customer's responsibility to supply a system and/or control which assures that any pump within a system is not operated below its minimum flow condition.
In many cases, this is not a problem because the system is operating within its own flow range to assure product delivery. A simple high pressure alarm, shut down and/or bypass control can be used. However, in systems where product demand has high swings or where more than 100% capacity units are desired to support a product system, additional care must be taken.

3.4.7 Thermal control

A thermal control of the unit can be provided by thermal sensors which read direct or "related to" fluid temperatures and respond accordingly by opening additional flow paths until the given unit re-establishes the acceptable temperature rise, and sets off alarms if not achieved within reasonable/normal time periods. (High limit could actually shut down unit).

3.4.8 Pressure and/or Flow Control

Pressure and/or flow sensors can be used to hold the unit at higher flows by opening additional flow paths once a "high pressure limit" or " low flow limit" was indicated.
Upon system reaching increased flow a "low pressure limit" or "high flow limit" setting would close the bypass flow path. Care must be taken to allow for signal spread to avoid cyclic conditions.

3.4.9 Operating at Reduced Capacity

CAUTION Damage to pump may result from prolonged operations at capacities less than MCSF as stated in Data Sheet.

4 INSTALLATION

Equipment operated in hazardous locations must comply with the relevant explosion protection regulations. See section 1.6.4, *Products used in potentially explosive atmospheres.*

4.1 Location

The pump should always be located as near as possible to the suction supply.
Install the unit close to the source of the liquid to be pumped. It is desired to simplify the suction and discharge piping layout. When selecting the location, be sure to allow adequate space for operation as well as for maintenance operations involving dismantling and inspections of parts.
Head room is an important consideration as an overhead lift of some type is required

4.2 Part assemblies

Motors may be supplied loose. It is the responsibility of the installer to ensure that the motor is assembled to the pump and lined up as detailed in section 4.5.2.

CAUTION Prior to grouting, an initial alignment check in accordance with the alignment section of this document shall be performed to verify that coupling spacing and final alignment can be achieved without modifying the hold down bolts or the machine feet. This is necessary to ensure that the baseplate was not damaged during the transportation.

4.3 Foundation

CAUTION There are many methods of installing pump units to their foundations. The correct method depends on the size of the pump unit, its location and noise vibration limitations. Non-compliance with the provision of correct foundation and installation may lead to failure of the pump and, as such, would be outside the terms of the warranty.
The foundation should be sufficiently rigid and substantial to prevent any pump vibration and to permanently support the baseplate at all points.

The most satisfactory foundations are made of reinforced concrete. These should be poured well in advance of the installation to allow sufficient time for drying and curing.
The General Arrangement Drawing (In Job's User Instruction) will furnish overall outline of pump baseplate, anchor bolt locations, size of bolts, etc in order to provide proper shape to the primary concrete. Anchor bolts can be positioned or by a special template (not supplied by FLOWSERVE see figure 4.1) or by the baseplate itself if proper pockets have been provided in primary concrete.

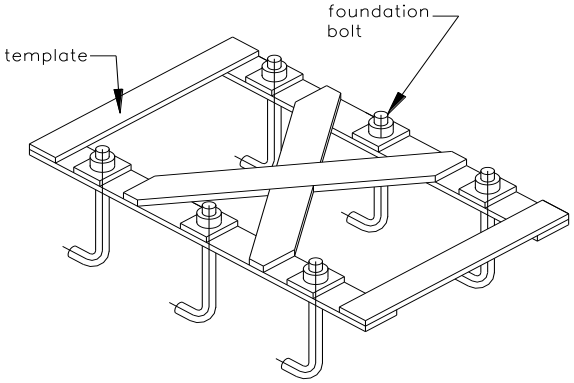

Figure 4.1
Template for Hanging Foundation Bolts

Figure 4.2 below illustrates an alternative foundation bolt arrangement which can be used in lieu of standard foundation bolts. Notice the large washer with lugs at the bottom. It should be welded to the bolt and pipe sleeve to prevent turning. Allow a little more than the specified threaded bolt length above the rail of the baseplate. The excess can always be cut off if it is not needed. A rough finish top surface is best when applying grout.

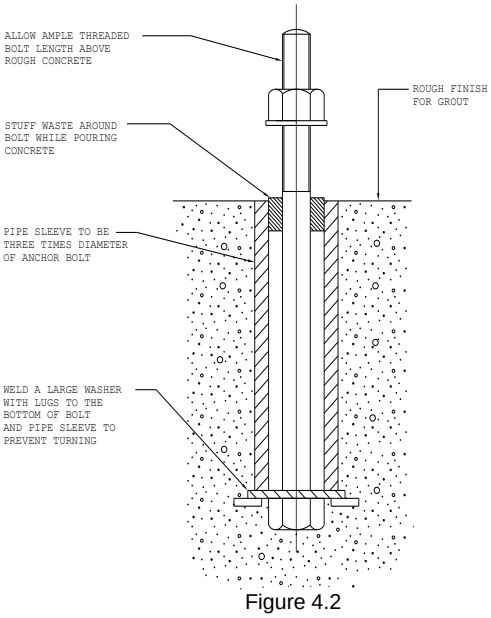

Figure 4.2

4.3.1 Baseplate levelling

Before putting the unit on the foundation, thoroughly clean the top of the foundation. Break off any loose pieces of cement and roughen the top with a chisel to afford a good hold for grout.

In case of installation over a steel structure (platform) ensure that the top of the steel structure is cleaned and degreased.

CAUTION In order to obtain the parallelism and flatness of pads required by API standard, baseplate has to be properly levelled by levelling screws provided on it and clamping the baseplate at the foundation bolts only (For proper detailed procedure refer to Chapter 5 para 3.9.4 of API RP 686).

Note: Coupling bolting and spacer piece must be removed from between the pump and driver half couplings before lifting baseplate with pumping element.

Note: When the unit is mounted directly on structural steel framing, it should be located directly over as near as possible to the main building members, beams, or walls. A soleplate should be bolted or welded to the steel frame to guarantee the proper surface.

Note: When lifting baseplate with pumping element, sling baseplate from all lifting lugs provided. Refer to Section 2.3.1

Prepare sufficient steel plates to be placed below each baseplate jacking screw furnished with the baseplate. The purpose of the plate is to spread the load of the screw without crushing the concrete below.

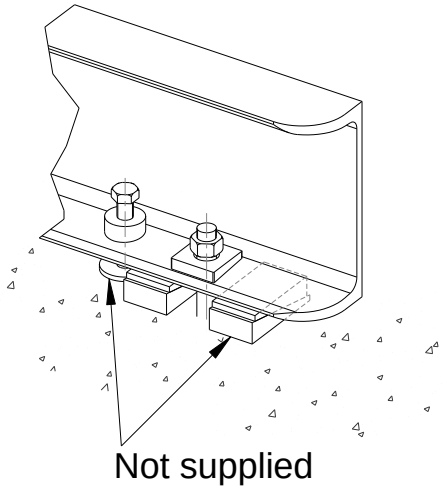

Figure 4.3

4.3.2 Method of levelling baseplate using wedges or shims

a) Level the baseplate by using a machinist's level on the machined surfaces of the pump and driver

pads. Levelling is best achieved by adjusting the shim pack thickness under each holding bolt. Carefully raise the baseplate by using either the baseplate jacking screws provided or by levering with a suitable pinch bar or by installing a low level hydraulic jack.

b) Adjust the shim pack thickness and lower the baseplate.

c) Repeat this procedure in a logical manner at each bolt position until the baseplate is both straight and levelled. A degree of 0.25 mm per metre (0.0035 inch per foot) length is achievable on most units with a maximum of 0.40 mm per meter length (0.005 inch per foot).

d) In case of installation on steel structures (like platforms) proceed with these extra steps:
   - Using a calibrated pin with a cone point mark the centre of baseplate support pads mounting holes on the soleplate.
   - Lift and move away the pump skid.
   - Drill and tap the soleplate fixing holes.
   - Replace the pump skid so that the soleplate fixing holes align with the baseplate support pads mounting holes.
   - Level the unit like done previously (see points a, b, c).

e) When the baseplate is level, pull down the foundation bolts so they are snug or tighten the fixing bolts in case of installation on steel structure. This may have disturbed the baseplate, so re-check the levels.

Ensure that shaft alignment per Section 4.5 can be achieved prior to grouting the baseplate.

4.4 Grouting

Build a dam around the foundation as shown in Figure 4.4 after levelling the baseplate. It is a matter of personal preference whether the levelling wedges under the baseplate should be removed after grouting. If you do not want to remove the wedges, carefully mark their locations before pouring grout.

CAUTION ***Before grouting, level machined pads of baseplate in both directions and perform a rough shaft/coupling alignment. Alignment after grout has set will not be possible if above is not satisfactorily completed.***

4.4.1 Fully Grouted Baseplates

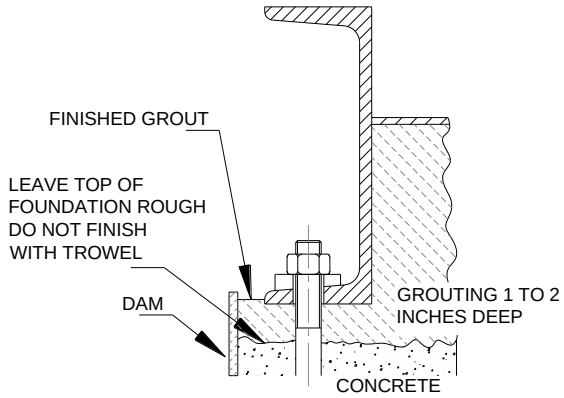

Figure 4.4

Use a good, high strength, non shrink grout mix and install as per manufacturer's instructions.
Holes are provided in the baseplate to permit pouring the grout and stirring while acting as air vents. Fill under the baseplate completely, stirring to assure correct distribution of the grout. Check to see that the grout flows under the edges of the baseplate evenly.

Note: Do not vibrate baseplate when grouting, making sure baseplate is vented correctly and all areas are thoroughly puddle to prevent any resonant problems.
When the grout is thoroughly hardened, remove the dam and wedges, if desired, filling in the holes they leave with grout.

Note: Pour grout until level reaches top of dam. Allow to dry sufficiently to prevent grout from overflowing while completing the remaining grouting.

4.4.2 Baseplate not Intended for Grouting but Installed on Concrete Foundations

According to the figure 4.3.1 and 4.4.1 the baseplate will not be grouted but only a sealing shall be provided. During the preparation, as indicated on the General Arrangement drawing a certain number of openings into the sealing must be guaranteed. After the sealing the blocks used to realise the openings must be removed. Blocks have to be wider than the baseplate longitudinal beam in order to guarantee the opening for the drainage.

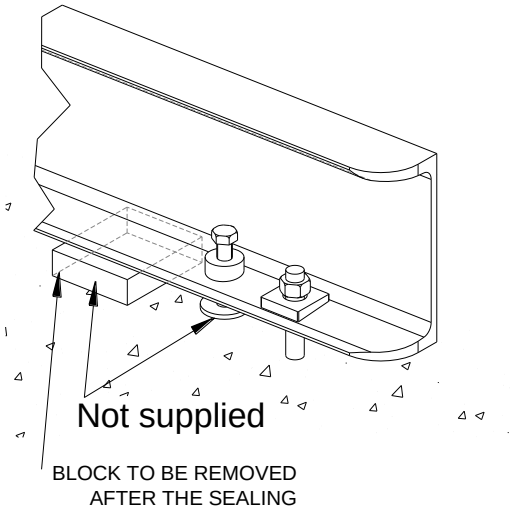

Figure 4.5

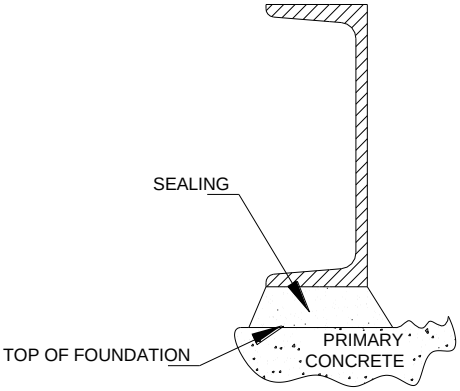

Figure 4.6

4.5 Initial alignment

4.5.1 Thermal expansion

CAUTION The pump and motor will normally have to be aligned at ambient temperature and should be corrected to allow for thermal expansion at operating temperature.

4.5.2 Alignment methods

DANGER Ensure pump and driver are isolated electrically and the half couplings are disconnected

CAUTION The alignment MUST be checked. Although the pump will have been aligned at the factory it is most likely that this alignment will have been disturbed during transportation or handling. If necessary, align the motor to the pump, not the pump to the motor.

4.5.2.1 Shaft/Coupling alignment

CAUTION **Shaft alignment must be correct for successful operation. Rapid wear, noise, vibration and actual damage to the equipment may be caused by shaft misalignment. The shafts must be aligned within the limits given within this section.**

Note: Adjustment to correct the alignment in one direction may alter the alignment in another direction. Always check in all directions after making any adjustment.

Coupled equipment must be aligned to minimise unnecessary stresses in shafts, bearings and coupling. Flexible couplings will not compensate for appreciable misalignment. Foundation settling, thermal expansion or nozzle loads resulting in baseplate/foundation deflection and vibration during operation may require the full coupling misalignment capability.

4.5.2.1.1 Types of misalignment

There are two types of shaft misalignment: angular and offset. Therefore, two sets of measurements and corrections are required. Both types of misalignment can occur in horizontal and vertical planes and are present in most applications.

A) Angular misalignment

In angular misalignment, the centre line of the shafts intersects, but are not on the same axis.

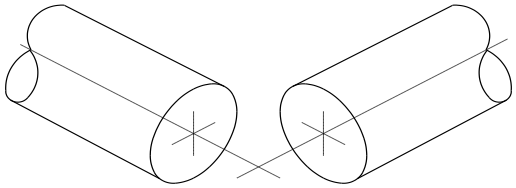

Figure 4.7

B) Offset misalignment

In offset misalignment, the shaft centre lines are parallel but do not intersect.

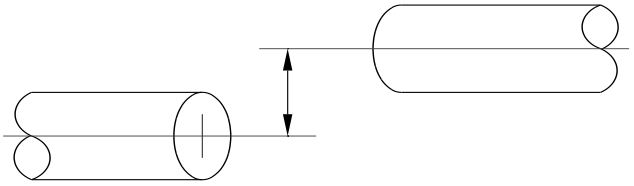

Figure 4.8 – offset misalignment

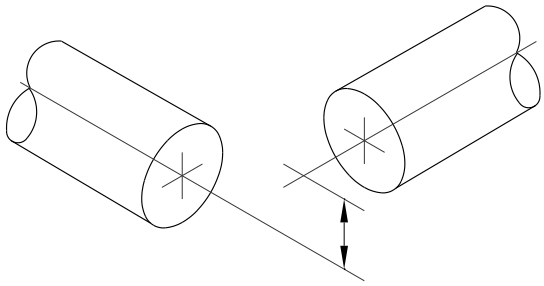

Figure 4.9 – combination of offset and angular misalignment

4.5.2.2 Alignment using the reverse dial Indicator

The following practices are recommended when using the reverse method of alignment. These should be carried out prior to main alignment.

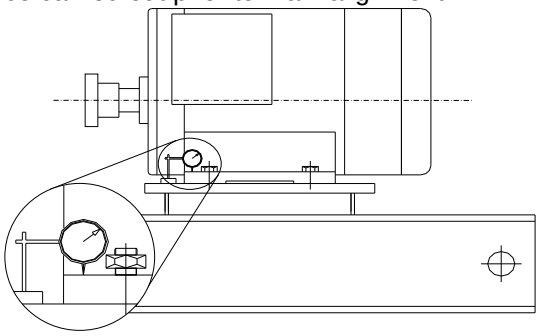

Figure 4.10

CHECK FOR SOFT FOOT

This is a check to ensure that there is no undue stress on the driver holding down bolts; owing to non-level baseplate or twisting. To check, remove all shims and clean surfaces and tighten down driver to the baseplate. Set a dial indicator as shown in sketch and loosen off the holding down bolt while noting any deflection reading on the Dial Test Indicator - a maximum of 0.05 mm (0.002 in.) is considered acceptable but any more will have to be corrected by adding shims, for example, if the Dial Test Indicator shows the foot lifting 0.15 mm (0.006 in.) then this is the thickness of shim to be placed under that foot. Tighten down and repeat the same procedure on all other feet until all are within tolerance.

Note: If the driver is an electric motor with sleeve bearings then the magnetic centre at which the rotor will run must be set. This is usually done by lining up a groove in the shaft to a pointer fixed to the motor body (refer to Motor Manufacture's instructions).

DANGER Ensure pump and driver are isolated electrically and the half couplings are disconnected.

CAUTION The alignment MUST be checked.

Although the pump will have been aligned at the factory it is most likely that this alignment will have been disturbed during transportation or handling. If necessary, align the motor to the pump, not the pump to the motor.

The alignment is achieved by adding or removing shims under the motor feet and also moving the motor horizontally as required. In some cases where the alignment cannot be achieved it will be necessary to move the pump before recommencing the above procedure.

For couplings with narrow flanges use a dial indicator as shown on figure 4.11 to check both parallel and angular alignment.

For detailed alignment procedure refer to API RP686.

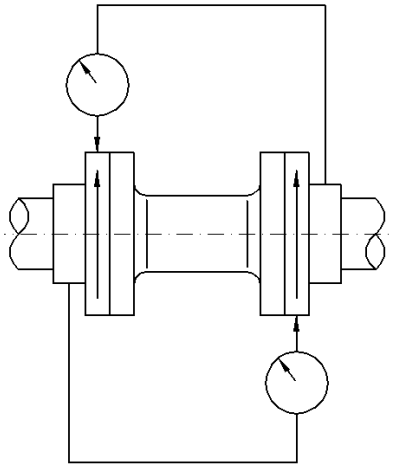

Figure 4.11

Maximum permissible misalignment at working temperature:

Parallel 0.05 mm (0.002 in.) TIR

Angular 0.05mm/100mm (0.0005In/In)

Pumps with thick flanged non-spacer couplings can be aligned by using a straight-edge across the outside diameters of the coupling hubs and measuring the gap between the machined faces using feeler gauges, measuring wedge or calipers.

When the electric motor 4has sleeve bearings it is necessary to ensure that the motor is aligned to run on its magnetic centreline.

Refer to the motor manual for details.

A button (screwed into one of the shaft ends) is normally fitted between the motor and pump shaft ends to fix the axial position.

CAUTION If the motor does not run in its magnetic centre the resultant additional axial force may overload the pump thrust bearing.

Complete piping as below and see sections 4.7, *"Final shaft alignment check"* up to and including section 5, *"Commissioning, start-up, operation and shutdown"* before connecting driver and checking actual rotation.

4.5.3 Shims

The shims between the equipment feet and mounting surface should be clean and dry. This is especially critical for pumps in service for sometime and need to be realigned. Water, dirt and rust may change the height of the shim pack over a period of time. Shims should be made large enough to support the weight of the equipment on its mounting foot. Do not use many thin shims as this may result in a spongy mounting.

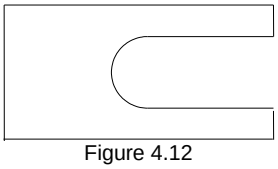

Figure 4.12
Recommended shim design

Move the equipment vertically by adding or removing the calculated thickness of shims. Torque holding down bolts to required values.

4.5.4 Hot alignment – Pump and driver dowels

Pump hold down bolts are to be torqued down and dowel pins are to be located in pump feet. (This is only applicable if Hot Alignment is required).
Refer to driver outline drawing and/or driver instructions for driver doweling information.
A hot check can only be made after the unit has been in operation a sufficient length of time to assume its NORMAL operating temperature and conditions. If the unit has been correctly cold set, the offset misalignment will be within within the limits stated on par 4.5.2.2 when in operation.
If not make adjustments.

Do not attempt any maintenance, inspection, repair or cleaning in the vicinity of rotating equipment. Such action could result in injury to operating personnel.

Before attempting any inspection or repair on the pump the driver controls must be in the "off" position, locked and tagged to prevent restarting equipment and injury to personnel performing service on the pump.

4.5.5 Assemble coupling

a) Assemble coupling as per the manufacturer's instructions included in Appendix of this manual.
b) Install coupling guard

4.5.6 Installation check list

a) Level Baseplate?
b) Grout Baseplate - Check Foundation Bolts?
c) Alignment Shaft/Coupling?
d) Piping Installed - Correct Vent, Gauge, Valve, Suction Strainer Locations?
e) All Flange Bolting Correctly Torqued with appropriate gaskets in place?
f) Check Shaft/Coupling Alignment again.
g) Coupling guard correctly installed ?

4.6 Piping

CAUTION Never use the pump as a support for piping.

4.6.1 General

These units are furnished for a particular service condition. Changes in the hydraulic system may affect performance adversely. This is especially true if the changes reduce the pressure at the suction or if the liquid temperature is increased. In case of doubt contact FLOWSERVE.
Suction and discharge piping should be of ample size, be installed in direct runs, and have a minimum of bends. Double bends must be avoided in suction line and a straight run of pipe, equal 7 to 10 times the pipe diameter is desired directly upstream of the suction nozzle.
In order to minimize friction losses and hydraulic noise in the pipework it is good practice to choose pipework that is one or two sizes larger than the pump suction and discharge. Typically main pipework velocities should not exceed 2 m/s (6 ft/sec) suction and 3 m/s (9 ft/sec) on the discharge.

Note: Provision must be made to support piping external to the pump to prevent excessive nozzle loads, maintain pump/driver alignment and avoid pipe induced vibrations.

Take into account the available NPSH which must be higher than the required NPSH of the pump.

Maximum forces and moments allowed on the pump flanges vary with the pump size and type. To minimize these forces and moments that may, if excessive, cause misalignment, hot bearings, worn couplings, vibration and the possible failure of the pump casing, the following points should be strictly followed:

- Prevent excessive external pipe load.
- Never draw piping into place by applying force to pump flange connections.
- Do not mount expansion joints so that their force, due to internal pressure, acts on the pump flange.

CAUTION Ensure piping and fittings are flushed before use.

⚠ Ensure piping for hazardous liquids is arranged to allow pump flushing before removal of the pump.

4.6.2 Suction Piping

a) The inlet pipe should be one or two sizes larger than the pump inlet bore and pipe bends should be as large radius as possible.
b) Keep the suction pipe free of all air pockets. (Vent is required).
c) Pipework reducers should have a maximum total angle of divergence of 15 degrees.
d) Use only eccentric reducers with the straight side on the top.
e) Flow should enter the pump suction with uniform flow, to minimize noise and wear.
f) A gate valve is recommended in the suction line.
g) Except if considerable foreign matter is expected strainers are not recommended in inlet piping. Inlet strainers, when used, should have a net "free area" (see section 4.6.2.1)

4.6.2.1 Suction Strainer

It is recommended that a temporary strainer be placed in the suction pipe to prevent lodging of foreign material in the impeller. A pipe spool of sufficient size should be provided with gauge taps to accommodate the suction strainer.

The strainer should be installed as close to the pump as possible. The open area of the strainer should have a minimum of a 3 to 1 ratio to the area of the pump inlet.

Pressure gauges should be installed on both sides of the strainer, so the pressure drop across the strainer can be measured when the unit is operated.

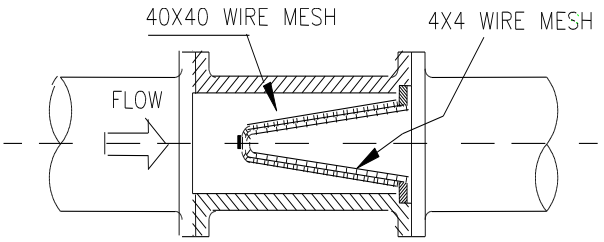

Typical temporary suction strainer

Pressure gauges should be installed on both sides of the screen so that the pressure drop across the screen can be measured.

When the unit is being started, the gauges on each side of the screen should be carefully watched. An increase in the differential pressure between the two gauges indicates that the screen is becoming clogged with dirt and scale. At this point, the pump should be shut down, and the screen cleaned and/or replaced.

Note: ***A spool piece should be installed in suction line so that the suction strainer may be installed and removed with a pressure gauge between the strainer and pump.***

4.6.2.2 Bypass Line

CAUTION ***Operation at low flows results in pump horsepower heating the liquid. A bypass may be required to prevent vaporization and subsequent pump damage. Refer to local FLOWSERVE branch to determine if a bypass is required. Mechanical damage may result from continuous operation at flows less than specified.***

4.6.3 Discharge piping

a) Install a check valve and a gate valve in the discharge pipe of the pump. When the pump is stopped, the check valve will protect the pump against excessive pressure and will prevent the pump from running backward. The check valve should be installed between the gate valve and the pump nozzle in order to permit its inspection. Never throttle pump on suction side and never place a valve directly on the pump inlet nozzle.
b) Pipework reducers should have a maximum total angle of divergence of 15 degrees.

4.6.4 Drains and Vents

Pipe pump casing drains and vent to a convenient disposal point.

Jacket piping

The stuffing boxes are jacketed for water cooling and also the bearing brackets can be jacketed. They

should be provided with cooling only if required by the operating conditions

4.6.5 Pumps fitted with mechanical seals
Single seals requiring re-circulation will normally be provided with auxiliary piping from pump casing already fitted. Symbols which FLOWSERVE work on seal connections are as follows:

Q	-	quench
F	-	flush
D	-	drain outlet
BI	-	barrier fluid in
BO	-	barrier fluid out

Single seals which require external flushing or auxiliary quench must be connected to a specific supply.
Double seals require a barrier liquid compatible with the pumped liquid.
With back-to-back double seals, the barrier liquid should be at a minimum pressure of 2 bar above the maximum pressure on the pump side of the inner seal. The barrier liquid pressure must not exceed limitations of the seal on the atmospheric side. For toxic service the barrier liquid supply and discharge must be in a safe area.
For specific information refer to the mechanical seals manufacturer's instructions.

4.6.6 Final checks
Check the tightness of all bolts in the suction and discharge pipework. Check also the tightness of all foundation bolts and auxiliary lines.

4.7 Final shaft alignment check
After connecting piping to the pump, rotate the shaft several times by hand to ensure there is no binding and all parts are free.

Recheck the coupling alignment, as previously described, to ensure no strain on coupling is due to pipe. If pipe strain exists, correct piping.

4.8 Electrical connections
DANGER Electrical connections must be made by a qualified Electrician in accordance with relevant local national and international regulations.

It is important to be aware of the EUROPEAN DIRECTIVE on potentially explosive areas where compliance with IEC60079-14 is an additional requirement for making electrical connections.

It is important to be aware of the EUROPEAN DIRECTIVE on electromagnetic compatibility when wiring up and installing equipment on site. Attention must be paid to ensure that the techniques used during wiring/installation do not increase electromagnetic emissions or decrease the electromagnetic immunity of the equipment, wiring or any connected devices. If in any doubt contact Flowserve for advice.

DANGER The motor must be wired up in accordance with the motor manufacturer's instructions (normally supplied within the terminal box) including any temperature, earth leakage, current and other protective devices as appropriate. The identification nameplate should be checked to ensure the power supply is appropriate.

A device to provide emergency stopping must be fitted.
If not supplied pre-wired to the pump unit, the controller/starter electrical details will also be supplied within the controller/starter.
For electrical details on pump sets with controllers see the separate wiring diagram.

CAUTION See section 5.3, Direction of rotation before connecting the motor to the electrical supply

4.9 Protection systems
The following protection systems are recommended particularly if the pump is installed in a potentially explosive area or is handling a hazardous liquid. If in doubt consult Flowserve.
If there is any possibility of the system allowing the pump to run against a closed valve or below minimum continuous safe flow a protection device should be installed to ensure the temperature of the liquid does not rise to an unsafe level.

If there are any circumstances in which the system can allow the pump to run dry, or start up empty, a power monitor should be fitted to stop the pump or prevent it from being started. This is particularly relevant if the pump is handling a flammable liquid.

If leakage of product from the pump or its associated sealing system can cause a hazard it is recommended that an appropriate leakage detection system is installed.
To prevent excessive surface temperatures at bearings it is recommended that temperature or vibration monitoring are carried out. See sections 5.7.4 and 5.7.5.

5 COMMISSIONING, START-UP, OPERATION AND SHUTDOWN

The following procedures are presented to outline the most important steps involved in pump operation. Any modification of these procedures due to particular installation peculiarities should conform to good engineering practices.

CAUTION Never operate the pump with suction valve closed.

Never operate the pump unless it is filled with liquid and vented**.**

Never operate the pump unless a liquid source is available.

Never operate the pump with discharge valve closed or below the minimum specified flow rate. If reduced capacity operation is required on occasion, a recirculating line should be installed according FLOWSERVE recommendations.

Where possible avoid severe thermal shocks due to sudden changes of liquid temperature. Warm-up the pump at all times before start-up if the pumped liquid is hot or subject to crystallize

Lubricate the unit prior to starting.

Do not operate the unit unless coupling guards are bolted in place**.**

Never operate the pump above the name plate conditions.

During pump operation, keep the vent and drain valves in closed position, to prevent any liquid from a high pressure point flowing into a low pressure point.

Do not wipe down in the vicinity of rotating parts. If unusual noise or high vibrations occur, secure the pump as soon as possible.

5.1 Pre-commissioning procedure

The following steps should be followed at initial start up and after the equipment has been overhauled:

a) Prior to installing the pump, flush the suction side of the system to remove all deposit (slag, bolts etc).
b) Ensure the pump and piping is clean. Before putting the pump into operation, the piping should be thoroughly back flushed to remove any foreign matter which may have accumulated during installation. Take all possible care not to contaminate your system.
c) Install suction strainer if required. (See Section 4.6.2.1).
d) Fill the bearing housings with the appropriate oil to the correct level. Bearing must receive a small amount of oil prior to starting to ensure adequate lubrication at start up. (Refer to Section 5.1.1).
e) Turn pump rotor by hand or with a strap wrench to make sure it turns smoothly.
f) Assure that correct seal piping has been installed and has not been damaged.

CAUTION **Most cartridge seals are equipped with a spacer between the gland plate and drive collar. This spacer must be removed before starting unit.**

g) Prior to coupling installation, bump start motor to check for correct rotation. If rotation is not correct refer to motor manual for appropriate connections to change rotation (Shut down all power prior to change).
h) Ensure coupling is correctly aligned and lubricated, and pump and driver is satisfactorily doweled. (Refer to Section 4.5).

The unit must not be operated unless coupling guard is securely and completely bolted in place. Failure to observe the warning could result in injury to operating personnel.

i) Check torque of all bolting and the plugs for tightness.

5.1.1 Lubrication

Lubrication of bearing is by oil circulation into the bearing housing provided by oil ring, slinger or pure oil mist. A constant level oiler is normally furnished (except for pure oil mist lubrication) with the pump unless otherwise specified.

5.1.1.1 Ball Ball Lubrication

Before filling the bearing housing reservoir, flush out the housing thoroughly with safety solvent and a leading grade of flushing oil, compatible with the lubrication oil that will be used.

The oil level must be maintained at the correct level: oil lack may cause overheating and failure of the bearings, while exceeding the correct level can result in leakage from the labyrinth seals. The constant

level oiler can be adjusted by changing the height of the cross arms which support the glass reservoir, as illustrated for TRICO oiler in section 5.1.2.

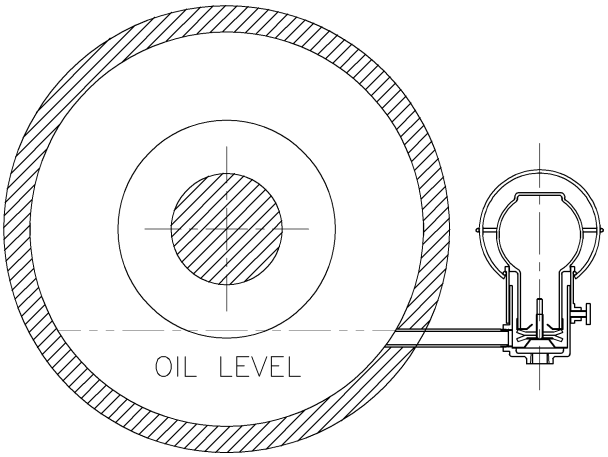

Figure 5.1

The oil circulation is ensured by slinger according to the description as follow.

Line bearing & thrust bearings side lubrication:

- The slinger splash the oil from the oil sump to the bearing housing walls;
- The oil is collected by the oil collector and reaches the line bearing through an hole;
- The oil returns into the oil sump once it flows into the bearings.

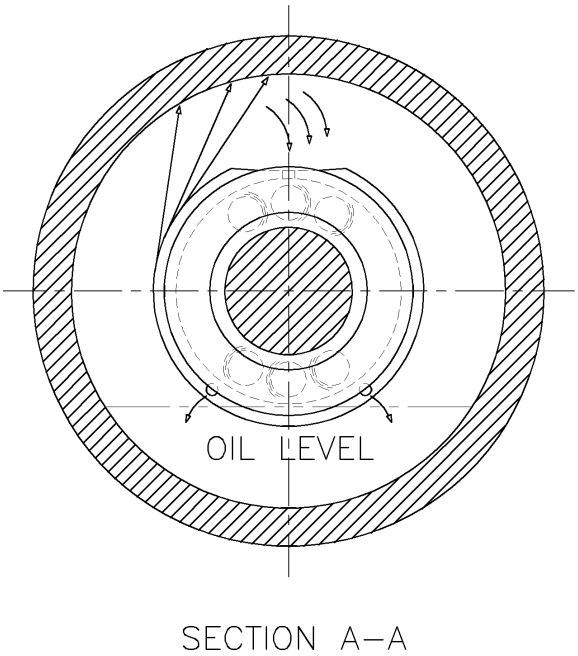

Figure 5.2

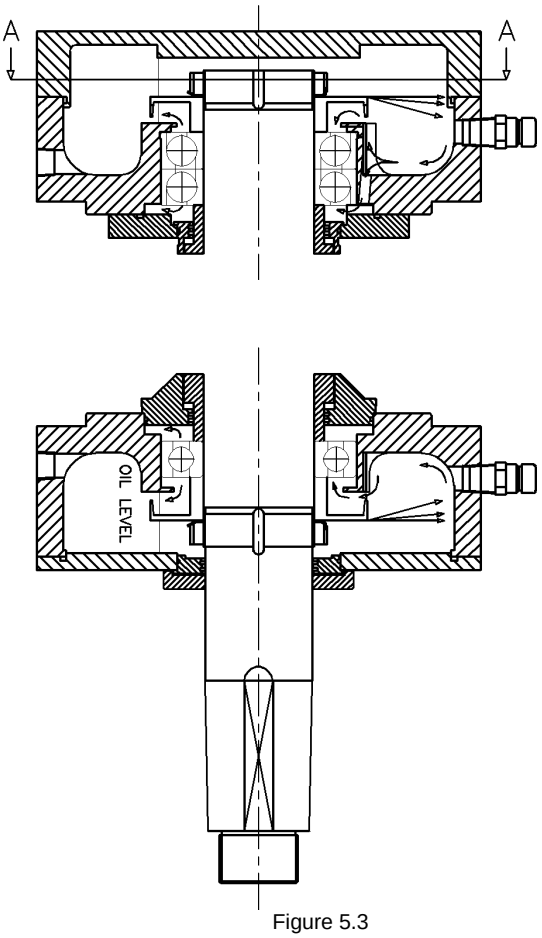

Figure 5.3

5.1.1.2 Sleeve Ball Lubrication

Before filling the bearing housing reservoir, flush out the housing thoroughly with safety solvent and a leading grade of flushing oil, compatible with the lubrication oil that will be used.

The oil level must be maintained at the correct level: oil lack may cause overheating and failure of the bearings, while exceeding the correct level can result in leakage from the labyrinth seals. The constant level oiler can be adjusted by changing the height of the cross arms which support the glass reservoir, as illustrated for TRICO oiler in section 5.1.2.

The oil circulation is ensured by oil ring according to the description as follow.

Line bearing & thrust bearings side lubrication:

- The oil ring splash the oil from the oil sump to the bearings;
- The oil returns into the oil sump once it flows into the bearings.

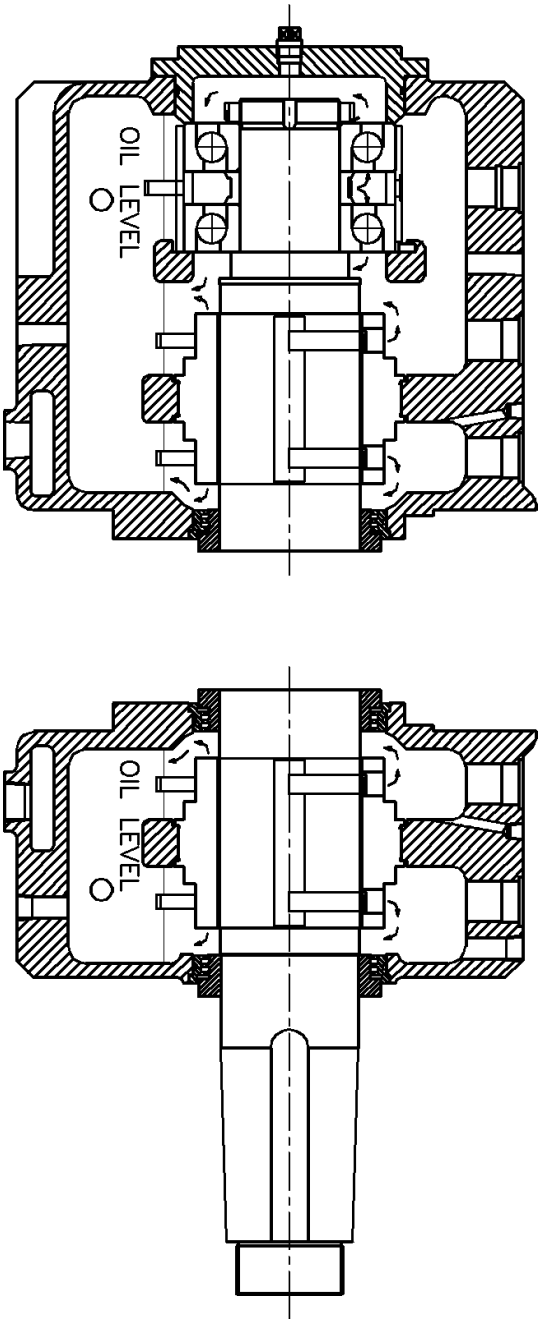

Figure 5.4

5.1.1.3 KTB Lubrication

The oil circulation is ensured by an high pressure system according to the description as follow.

Line bearing & thrust bearings side lubrication:

- High pressure oil pass through bearing housing hole to the bearings;
- The oil returns into the oil sump once it flows into the bearings.

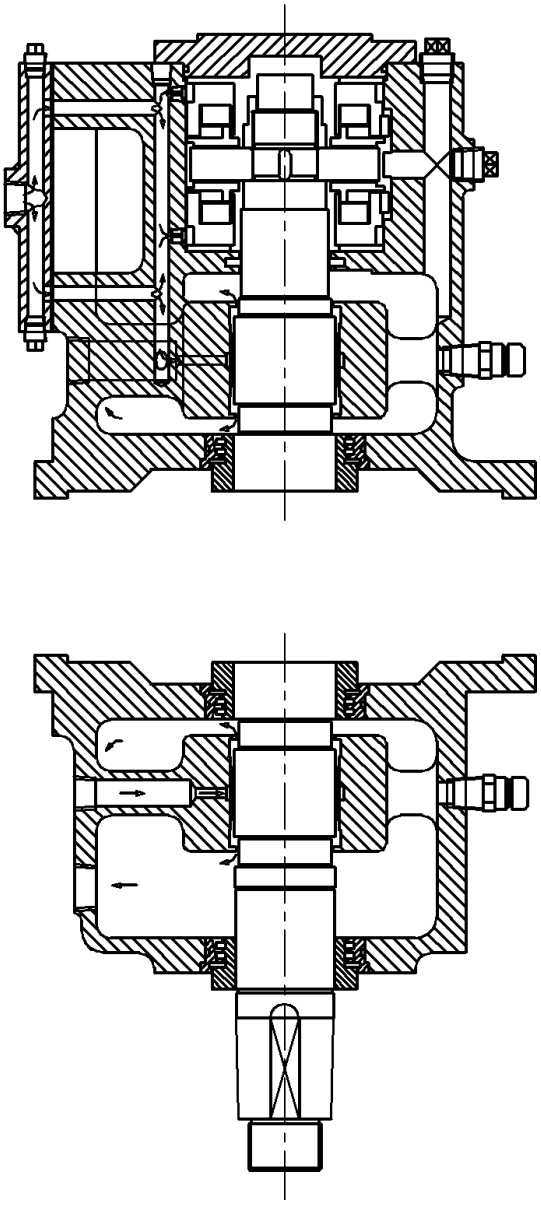

Figure 5.5

5.1.2 TRICO oiler setting (standard)

TRICO is used only on ball ball lubrication and sleeve ball lubrication:

a) Initial fill via top of housing, using overflow plug to establish correct level.
b) Release thumb screw and remove bottle. Establish a measurement from the centre line of the oiler connection in bearing housing to the upper cross arm of 6 mm (0.24 in.); this can be obtained by completely screwing down the lower arm as illustrated on figure 5.6.
c) Fill bottle with recommended oil and install on holder. Remove and fill bottle as many times as is

required to fill the bearing housing up to the cross arm level and no air bubbles appear in the bottle.

d) Remove bottle and ascertain that the oil level is 6 mm (0.24 in.) from the centre line of oiler connection. Adjust upper cross arm as required and lock in place with lower arm.

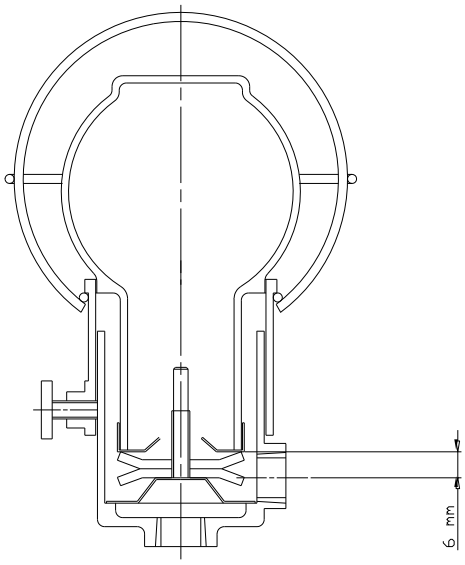

Figure 5.6

CAUTION Never fill reservoir through the air vent opening**.**

The constant level oil control maintains a constant level of oil in the reservoir. The control feeds only enough oil to maintain the required level. It operates on the liquid seal principle, feeding only when the level in the reservoir is low enough to break the liquid seal at the end of the shank, thus permitting air to enter the bottle. It will cease to feed when there is sufficient oil in the reservoir to cover the hole in the end of the shank.

5.1.3 Inspection

For ball ball and sleeve ball lubrication inspect the oil level in the bearing housing at least once a day. Inspect the condition of the oil at least weekly. Oil is always subject to gradual deterioration from use and contamination from dirt and moisture which is the cause of premature bearing wear.

CAUTION For oil lubricated pumps, fill the bearing housing with correct grade of oil to the correct level, i.e. constant level oiler bottle (standard configuration) and sight glass (when fitted on request).

Figure 5.7
Sight glass

5.1.4 Replenishment

Replenish the oil in the oiler as required for ball ball and sleeve ball. More frequent replenishment at high temperatures may be required.

5.1.5 Oil change

Frequency of oil change is dependent on pump service and environmental conditions. As a general guide, oil in the bearing housing should be changed every 4000 operating hours, after the initial change.

5.1.6 Lubrication Specification

The ideal bearing lubricant is a straight well refined, neutral mineral, preferably of the turbine type. It should not contain free acid, chlorine sulphur or more than a trace of free alkali. It is suggested that the oil conform to the following physical characteristics.

5.1.7 Oil Mist Lubrication

5.1.7.1 Pure Oil Mist Lubrication

If the pump bearing housing is arranged for pure oil mist lubrication the following connections are provided in the bearing housing:

Ball ball lubrication:
- ¼” NPT inlet connection
- ¼” NPT vent connection
- ½” NPT drain connection

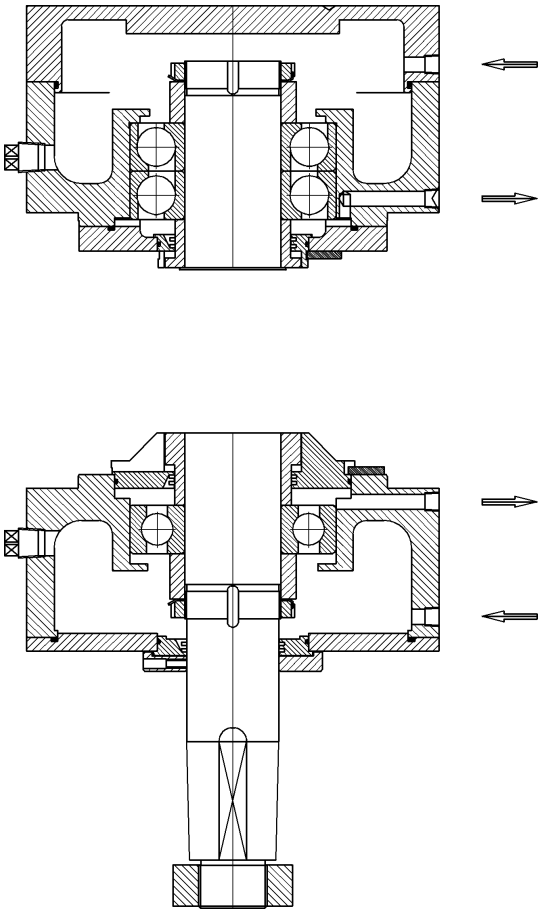

Figure 5.8

Remove inlet and outlet pipe plugs from above connections. Install appropriate reclassifier in the top opening, leave open vent connections, connect oil recovery trap to bottom opening or leave it open to act as a relief. Refer to Figure 5.8 for details.

No oil ring, slinger or constant level oiler are supplied.

5.1.7.2 Purge Oil Mist Lubrication

If the pump bearing housing is arranged for purge oil mist lubrication the following connections are provided in the bearing housing:

Ball ball lubrication:
- ¼” NPT inlet connection
- ¼” NPT vent connection
- ½” NPT drain connection

Sleeve ball lubrication:
Line bearing
- ½”to¼” NPT adapter oil mist inlet connection
- ¼” NPT vent connection
- ½” NPT drain connection

Thrust bearing
- ¼” NPT inlet connection
- ¼” NPT vent connection
- ½” NPT drain connection

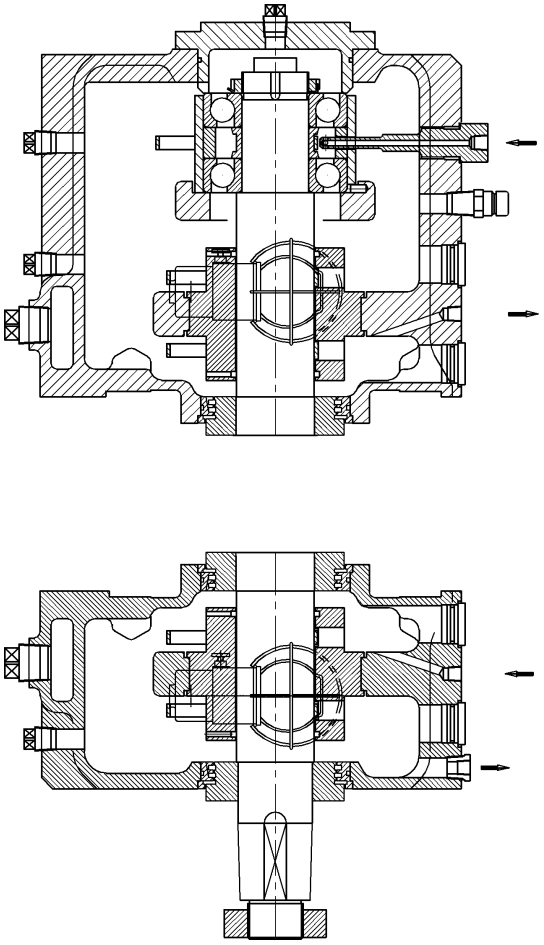

Figure 5.9

Remove inlet and outlet pipe plugs from above connections. Install appropriate reclassifier in the top opening, leave open vent connections, connect oil recovery trap to bottom opening or leave it open to act as a relief. Refer to Figure 5.8-9 for details.
Also this configuration include the internals like slinger or oil ring as specified in section 5.1.1 and a special constant level oiler designed for the Purge arrangement.

5.2 Pump Lubricants

5.2.1 Recommended oil lubricants

	Oil	Oil Ring or Slinger Lubrication		Pure Oil Mist Lubrication
Centrifugal Pump Lubrication	Lubrication service	Ball Bearing		
	Type	Mineral Oil (Petroleum Based)		Mineral Oil (Petroleum Based)
	Viscosity mm ²/s 40 ºC [cSt]	46	68	100
	Oil temperature range * ºC (ºF)	-5 to 75 (up to 167)	up to 85 (up to 185)	-30 and above (59 and above)
	Approx. Consumption continuous operation	0.12 litres / month ¼ pint per month	0.12 litres / month ¼ pint per month	0.12 litres / month ¼ pint per month
	Running in Period	500 hours	500 hours	500 hours
	First Oil Charge	500 hours	500 hours	500 hours
	Further Oil Changes	4000 hours	4000 hours	4000 hours
	One Year Consumption	1.44 litres approx. max	1.44 litres approx. max	1.44 litres approx. max
	Designation according to DIN51502 ISO VG	46	68	100
Oil Companies and Lubricants	**BP**	BP Energol HL46 BP Energol HLP46	BP Energol HL68 BP Energol HLP68	-
	CASTROL	Perfecto T46	Perfecto T68	-
	Elf	TURBELF SA46 ELFOLNA DS46	TURBELF SA68 ELFOLNA DS68	-
	Esso	TERESSO 46 NUTO H46	TERESSO 68 NUTO H68	-
	LSC (for oil mist)	LSO 46 Synthetic oil	LSO 68 Synthetic oil	LSO 100 Synthetic oil
	Mobil	Mobil DTE oil medium Mobil DTE15M Mobil DTE25	Mobil DTE oil heavy medium Mobil DTE26	-
	Q8	Q8 Verdi 46 Q8 Haydn 46	Q8 Verdi 68 Q8 Haydn 68	-
	Shell	Shell Tellus 01 C 46 Shell Tellus 01 46 Shell Turbo T46	Shell Tellus 01 C68 Shell Tellus 01 68 Shell Turbo T68	-
	Texaco	Rando Oil 46 Rando Oil HD B-46	Rando Oil 68 Rando Oil HD C-68	-
	Total	Azolla ZS46	Azolla ZS68	-

(*) Note that it normally takes 2 hours for bearing temperature stabilize and the final temperature will depend on the ambient, r/min, pumpage temperature and pump size. Also some oils have a greater Viscosity Index than the minimum acceptable of 95 (e.g. Mobil DTE13M) which may extend the minimum temperature capability of the oil. Always check the grade capability where the ambient is less than -5 ºC (-23 ºF).

If a synthetic lubricant (fire resistant fluid) is to be used instead of the normal type oil for the lubrication of bearings, gears etc., the material of all gaskets and "O" rings in contact with the lubricant must be compatible with the lubricant. Normal gasket materials will usually swell and deteriorate when immersed in synthetic lubricants: also normal paints will peel from internal walls of reservoirs and bearing chambers.

In case of Pure Oil Mist lubrication the lubricant oil should be rust and oxidation inhibited and stray mist suppressed, manufactured in accordance with good commercial practice. The viscosity should be ISO VG 100. Recommended Oil Suppliers are according to the previous list.

5.2.2 Recommended fill quantities

5.2.2.1 Ball Ball

Bearing Housing Size (*)	Bearing Designation		Oil Consumption			
			D.E. Side		N.D.E. Side	
	Radial Bearing	Thrust Bearing	MIST	OIL	MIST	OIL
			l/min (gall/min)	cc/min (in.^{3}/min)	l/min (gall/min)	cc/min (in.^{3}/min)
EC 0	6308	2 x 7308 BG	2.00 (0.5)	0.008 (0.0005)	4.00 (1.1)	0.016 (0.0010)
EC 1	6310	2 x 7310 BG	2.50 (0.7)	0.010 (0.0006)	5.00 (1.3)	0.020 (0.0012)
EC 2	6312	2 x 7312 BG	3.00 (0.8)	0.012 (0.0007)	6.00 (1.6)	0.024 (0.0015)
EC 34	6314	2 x 7314 BG	3.50 (0.9)	0.014 (0.0009)	7.00 (1.9)	0.028 (0.0017)
EC 5	6215	2 x 7215 BG	3.75 (1.0)	0.015 (0.0009)	7.50 (2.0)	0.030 (0.0018)
EC 6	6217	2 x 7217 BG	4.25 (1.1)	0.017 (0.0010)	8.50 (2.3)	0.034 (0.0021)
EC 7	6220	2 x 7220 BG	5.00 (1.3)	0.020 (0.0012)	10.00 (2.6)	0.04 (0.0024)
EC 8	6224	2 x 7224 BG	6.00 (1.6)	0.024 (0.0015)	12.00. (3.2)	0.048 (0.0029)
EC 9	6228	2 x 7228 BG	7.00 (1.9)	0.028 (0.0017)	14.00 (3.7)	0.056 (0.0034)

* The bearing housing size can be identified from the identifying marks cast on the housing on the horizontal centre line in the opposite side to the oiler and from the thrust bearing side indicated by nameplate.

Bearing Housing Size (*)	Bearing Designation		Oil Fill Capacity	
	Radial Bearing	Thrust Bearing	D.E. Side	N.D.E. Side
			litres (oz)	litres (oz)
EC 0	6308	2 x 7308 BG	1.5 (50.7)	4.4 (148.8)
EC 1	6310	2 x 7310 BG	2.0 (67.6)	4.5 (152.2)
EC 2	6312	2 x 7312 BG	2.0 (67.6)	4.2 (142.0)
EC 34	6314	2 x 7314 BG	2.0 (67.6)	4.0 (135.3)
EC 5	6215	2 x 7215 BG	2.3 (77.8)	5.0 (169.1)
EC 6	6217	2 x 7217 BG	2.3 (77.8)	5.0 (169.1)
EC 7	6220	2 x 7220 BG	3.0 (101.4)	6.5 (219.8)
EC 8	6224	2 x 7224 BG	2.6 (87.9)	5.5 (186.0)
EC 9	6228	2 x 7228 BG	3.5 (118.3)	6.5 (219.8)

5.2.2.2 Sleeve Ball

Bearing Housing Size (*)	Bearing Designation		Oil Consumption			
			D.E. Side		N.D.E. Side	
	Radial Bearing Bore [mm]	Thrust Bearing	MIST	OIL	MIST	OIL
			l/min (gall/min)	cc/min (in.^{3}/min)	l/min (gall/min)	cc/min (in.^{3}/min)
ESB 0	40	2 x 7308 BG	2.00 (0.5)	0.008 (0.0005)	4.00 (1.1)	0.016 (0.0010)
ESB 1	50	2 x 7308 BG	2.50 (0.7)	0.010 (0.0006)	5.00 (1.3)	0.02 (0.0012)
ESB 2	60	2 x 7312 BG	3.00 (0.8)	0.012 (0.0007)	6.00 (1.6)	0.024 (0.0015)
ESB 34	70	2 x 7312 BG	3.00 (0.8)	0.012 (0.0007)	6.00 (1.6)	0.024 (0.0015)
ESB 5	80	2 x 7312 BG	3.00 (0.8)	0.012 (0.0007)	6.00 (1.6)	0.024 (0.0015)
ESB 6	90	2 x 7312 BG	3.00 (0.8)	0.012 (0.0007)	6.00 (1.6)	0.024 (0.0015)
ESB 7	100	2 x 7317 BG	4.25 (1.1)	0.017 (0.0010)	8.50 (2.3)	0.034 (0.0021)
ESB 8	120	2 x 7317 BG	4.25 (1.1)	0.017 (0.0010)	8.50 (2.3)	0.034 (0.0021)
ESB 9	140	2 x 7222 BG	7.00 (1.9)	0.028 (0.0017)	14.00 (3.7)	0.056 (0.0034)

* The bearing housing size can be identified from the identifying marks cast on the housing on the horizontal centre line in the opposite side to the oiler and from the thrust bearing side indicated by nameplate.

Bearing Housing Size (*)	Bearing Designation		Oil Fill Capacity	
	Radial Bearing Bore [mm]	Thrust Bearing	D.E. Side litres (oz)	N.D.E. Side litres (oz)
ESB 0	40	2 x 7308 BG	0.80 (27.1)	1.50 (50.7)
ESB 1	50	2 x 7308 BG	0.80 (27.1)	1.50 (50.7)
ESB 2	60	2 x 7312 BG	1.50 (50.7)	2.75 (93.0)
ESB 34	70	2 x 7312 BG	1.50 (50.7)	2.75 (93.0)
ESB 5	80	2 x 7312 BG	1.50 (50.7)	2.75 (93.0)
ESB 6	90	2 x 7312 BG	1.50 (50.7)	2.75 (93.0)
ESB 7	100	2 x 7317 BG	3.00 (101.4)	7.00 (236.7)
ESB 8	120	2 x 7317 BG	3.00 (101.4)	7.00 (236.7)
ESB 9	140	2 x 7222 BG	5.50 (186.0)	9.00 (304.3)

5.2.2.3 KTB

Bearing Housing Size (*)	Rated Speed r.p.m.	Bearing Designation		Oil Capacity	
		Radial Bearing Bore mm	Thrust Bearing	D.E. Side l/min (gall/min)	N.D.E. Side l/min (gall/min)
EK 1	1500	50	4	0.9 (0.2)	1.9 (0.5)
	1800			1.0 (0.3)	3.0 (0.8)
	3000			1.4 (0.4)	5.2 (1.4)
	3600			1.8 (0.5)	6.2 (1.6)
EK 2	1500	60	5	1.0 (0.3)	4.2 (1.1)
	1800			1.1 (0.3)	5.1 (1.4)
	3000			1.6 (0.4)	9.4 (2.5)
	3600			2.1 (0.6)	11.1 (2.9)
EK 34	1500	70	5	1.2 (0.3)	4.4 (1.2)
	1800			1.4 (0.4)	5.4 (1.4)
	3000			2.0 (0.5)	9.8 (2.6)
	3600			2.5 (0.7)	11.5 (3.0)
EK 5	1500	80	5	1.4 (0.4)	4.6 (1.2)
	1800			1.7 (0.4)	5.7 (1.5)
	3000			2.4 (0.6)	10.2 (2.7)
	3600			2.9 (0.8)	11.9 (3.1)
EK 6	1500	90	5	1.7 (0.5)	4.9 (1.3)
	1800			2.0 (0.5)	6.0 (1.6)
	3000			2.8 (0.7)	10.6 (2.8)
	3600			3.4 (0.9)	12.4 (3.3)
EK 7	1500	100	5	2.0 (0.5)	5.2 (1.4)
	1800			2.4 (0.6)	6.4 (1.7)
	3000			3.3 (0.9)	11.1 (2.9)
	3600			3.8 (1.0)	12.8 (3.4)
EK 8	1500	120	7	2.6 (0.7)	10.6 (2.8)
	1800			3.1 (0.8)	14.7 (3.9)
EK 9	1500	140	9	3.5 (0.9)	22.5 (5.9)
	1800			4.0 (1.1)	32.0 (8.5)

* The bearing housing size can be identified from the identifying marks cast on the housing on the horizontal centre line in the opposite side to the oiler and from the thrust bearing side indicated by nameplate.

5.2.3 Bearing housing oil limitations

Recommended Oil Temperature At Start Up	15.6 °C 60 °F
Desirable Operating Temperature	60-71 °C 140-160 °F
Oil Level Above Oil Connection Centre line	6 mm

When the starting temperature is below -10°C (14°F) for long time it's suggested to use synthetic oil. Other drivers and gearboxes, if appropriate, should be lubricated in accordance with their manuals.

CAUTION In the case of product lubricated bearings the source of product supply should be checked against the order. There may be requirements for an external clean supply, particular supply pressure or the commencement of lubrication supply before pump start-up.

5.2.4 CAUTION Lubrication schedule

5.2.4.1 Oil lubricated bearings

Normal oil change intervals are 4000 operating hours or at least every 6 months. For pumps on hot service or in severely damp or corrosive atmosphere, the oil will require changing more frequently. Lubricant and bearing temperature analysis can be useful in optimizing lubricant change intervals.
The lubricating oil should be a high quality mineral oil having foam inhibitors. Synthetic oils may also be used if checks show that the rubber oil seals will not be adversely affected.
Based on the specified operating conditions and an ambient temperature of 43C (110°F) for ring-oiled or splash systems, oil sump temperature below 82C (180°F) is expected.

A continuously rising temperature, or an abrupt rise, indicates a fault.

5.3 Direction of rotation

CAUTION Ensure the pump is given the same rotation as the pump direction arrow fit on bearing housing. In any case the direction of rotation must be checked with the pump disconnected.
To avoid dry running the pump must either be filled with liquid or have the flexible coupling disconnected before driver is switched on.

CAUTION If maintenance work has been carried out to the site's electricity supply, the direction of rotation should be re-checked as above in case the supply phasing has been altered.

5.4 Guarding

⚠ Guarding is supplied fitted to the pump set. If this has been removed or disturbed ensure that all the protective guards around the pump coupling and exposed parts of the shaft are securely fixed.

5.5 Priming and auxiliary supplies

CAUTION Ensure all electrical, hydraulic, pneumatic, sealant and lubrication systems (as applicable) are connected and operational.

CAUTION Ensure the inlet pipe and pump casing are completely full of liquid before starting continuous duty operation.

CAUTION **Before starting or while operating the pump, the casing and suction line must be completely filled with the liquid being pumped. The rotating parts depend on this liquid for lubrication and the pump may seize if operated without liquid.**

5.6 Starting the pump

a) Close discharge valve if valve is not already closed, and then crack open to assure minimal flow. (Do not start unit with fully closed valve). On first starts care must be taken not to cause a system water hammer.
b) Prepare the driver for start up in accordance with the driver manufacturer's instructions.
c) Warm up pump (if applicable).
d) Avoid severe thermal shocks to the pump as the result of sudden liquid temperature changes. The pump must be preheated prior to start up. Unless otherwise specified the thermal temperature of the casing must be within 55 °C (100 °F) of the temperature of the liquid to be pumped at time of start up. Due to the heavy metal sections, the casing will lag the liquid temperature during such changes, and severe temperature stresses and subsequent misalignment of machined fits may result. Preheating is accomplished by circulating a small amount of hot fluid through the casing by utilizing vents, drains or bypass from discharge. Preheat pump slowly at a rate not to exceed 55 °C per hour (100 °F per hour).
e) Prime pump and ensure suction valve is open.

CAUTION ***Ensure flushing and/or cooling/ heating liquid supplies (if required) are turned ON before starting the pump.***

CAUTION ***Before starting or while operating the pump, the casing and suction line must be completely filled with the liquid being pumped. The rotating parts depend on this liquid for lubrication and the pump may seize if operated without liquid.***

f) Ensure pump recirculating line (if required) is open, clear and free of obstructions.
g) Check that pump is vented by observing leakage from casing vent (when fitted) and seal piping vent. Close vent (if fitted) when liquid is emitted.
h) Turn on cooling liquid and assure correct flow exists (to cooler, insert gland etc.) as specified.
i) Double check pump rotation by starting unit momentarily. ***The direction of input shaft rotation is counter clockwise when facing pump shaft from coupling end. Ensure that the pump coasts down to a gradual stop.***

CAUTION ***If pump stops abruptly when driver is shut down, investigate for pump binding. Take necessary remedial action before resuming operation.***

j) Start the driver and bring it up to speed quickly.
k) As soon as the pump is up to rated speed slowly open discharge valve.
l) This will avoid abrupt changes in velocity and prevent surging in the suction line.
m) Perform the operating checks.

5.7 Operating checks

⚠ ***In the interest of operator safety the unit must not be operated above the nameplate conditions. Such operations could result in unit failure causing injury to operating personnel. Consult user instruction book for correct operation and maintenance of the pump and its supporting components.***

CAUTION ***Operation at low flows results in pump heating the liquid. A bypass may be required to prevent vaporisation and subsequent pump damage. Refer to local FLOWSERVE branch to determine if a bypass is required. Mechanical damage may result from continuous operation at flows less than the specified minimum continuous stable flow.***

Immediately after start up, and frequently during running check the following:

a) Check suction and discharge pressure gauges.
b) Check pressure gauges on each side of suction strainer.
c) Check for excessive leakage at seal areas.
d) Check for unusual noises.
e) Check oil level in bearing housing. (Refer to Section 5).

⚠ ***Operation of the unit without correct lubrication can result in overheating of the bearings, bearing failures, pump seizures and actual break-up of the equipment exposing operating personnel to physical injury.***

f) Check for vibrations.
g) Check for adequate flow of cooling liquids.

Check for hot alignment: for services 55 °C (100 °F) and more above ambient, after unit has been operated a sufficient period of time to reach normal operating temperature and condition, the unit is to be shut down and a "HOT" coupling alignment check must be made (Refer to Section 4.5.4).

5.7.1 Venting the pump

⚠ Vent the pump to enable all trapped air to escape taking due care with hot or hazardous liquids.

Under normal operating conditions, after the pump has been fully primed and vented, it should be unnecessary to re-vent the pump.

5.7.2 Pumps fitted with mechanical seal

Mechanical seals require no adjustment. Any slight initial leakage will stop when the seal is run in.

Before pumping dirty liquids it is advisable, if possible, to run in the pump mechanical seal using clean liquid to safeguard the seal face.

⚠ CAUTION External flush or quench should be started before the pump is run and allowed to flow for a period after the pump has stopped.

⚠ CAUTION Never run a mechanical seal dry, even for a short time.

5.7.3 Bearings

Ex If the pumps are working in a potentially explosive atmosphere temperature or vibration monitoring at the bearings is recommended

If bearing temperatures are to be monitored it is essential that a benchmark temperature is recorded at the commissioning stage and after the bearing temperature has stabilized (see 5.2.4.1 for temperature limits).

When a oil temperature sensor is provided:

- set the alarm at 82 °C (180 °F) and the trip at 90 °C (194 °F) for high ambient temperature and/or hot service

When the bearing temperature sensor is provided:

- set the alarm at 93 °C (199 °F) and the trip at 105 °C (221 °F)

It is important, to keep a check on bearing temperatures. After start up the temperature rise should be gradual, reaching a maximum after approximately 1.5 to 2 hours. This temperature rise should then remain constant or marginally reduce with time.

5.7.4 Normal vibration levels, alarm and trip

For guidance, pumps generally fall under a classification for rigid support machines within the International rotating machinery standards and the recommended maximum levels below are based on those standards.

⚠ CAUTION Alarm and trip values for installed pumps should be based on the actual measurements (N) taken on the pump in the fully commissioned as new condition. Measuring vibration at regular intervals will then show any deterioration in pump or system operating conditions.

Vibration velocity – unfiltered **mm/s (in./s) r.m.s.**		HED/HED-DS **mm/s (in./s) r.m.s.**
Normal	**N**	≤ 5 (0.2)
Alarm	**N** x 1.25	≤ 6.2 (0.25)
Shutdown trip	**N** x 2.0	≤ 10 (0.4)

5.7.5 Stop/start frequency

Pump sets are normally suitable for the number of equally spaced stop/starts per hour shown in the table below. Check actual capability of the driver and control/starting system before commissioning.

Motor rating kW (hp)	Maximum stop/starts per hour
Up to 15 (20)	15
Between 15 (20) and 90 (120)	10
Above 90 (120)	6

Where duty and standby pumps are installed it is recommended that they are run alternately every week.

5.8 Normal Start Up

The starting procedure to be followed for normal start up is the same as that for initial starting with the exception that Step (i) section 5.6 "CHECK ROTATION" does not have to be repeated as long as driver systems have not been changed since last pump operation.

5.9 Stopping the pump

a) Shut down driver.

CAUTION ***The pump should be shut down rapidly to protect the internal wearing parts which are lubricated by the liquid being pumped.***

Note: If pump stops abruptly when driver is shut down, investigate for pump binding. Take necessary remedial action before restarting pump.

b) Close the pump discharge valve, while the suction valve normally remains open.

c) Close valve in bypass line and closed whenever possible, switch off flushing and/or cooling liquid supplies.

d) CAUTION ***If pump is subjected to freezing temperatures the pump must be drained of liquid to prevent damage to the pump. For pumping hot liquid or fluid subject to crystallize, the flush supply must be maintained on completion of pumping, to avoid seals damage.***

Note: In some installations the use of a check valve is not feasible due to the creation of pressure surges or water hammer as a result of the sudden closing of the valve under high discharge pressure. In such cases the discharge valve should be closed slowly prior to stopping the driver to eliminate the possibility of water hammer.

5.10 Hydraulic, mechanical and electrical duty

This product has been supplied to meet the performance specifications of your purchase order, however it is understood that during the life of the product these may change. The notes on section 3.4 may help the user decide how to evaluate the implications of any change. If in doubt contact your nearest Flowserve office.

6 MAINTENANCE

6.1 General

It is the plant operator's responsibility to ensure that all maintenance, inspection and assembly work is carried out by authorized and qualified personnel who have adequately familiarized themselves with the subject matter by studying this manual in detail. (See also section 1.6)

Oil and grease leaks may make the ground slippery. Machine maintenance must always begin and finish by cleaning the ground and the exterior of the machine.

If platforms, stairs and guard rails are required for maintenance, they must be placed for easy access to areas where maintenance and inspection are to be carried out. The positioning of these accessories must not limit access or hinder the lifting of the part to be serviced.

When air or compressed inert gas is used in the maintenance process, the operator and anyone in the vicinity must be careful and have the appropriate protection.

Do not spray air or compressed inert gas on skin.

Do not direct an air or gas jet towards other people.

Never use air or compressed inert gas to clean clothes.

Before working on the pump, take measures to prevent an uncontrolled start. Put a warning board on the starting device with the words: ***"Machine under repair: do not start"***.

With electric drive equipment, lock the main switch open and withdraw any fuses. Put a warning board on the fuse box or main switch with the words: ***"Machine under repair: do not connect".***

DANGER Before attempting any inspection or repair on the pump, the driver controls must be in the "off" position, locked and tagged to prevent injury to personnel performing service on the pump.

Before attempting to disassemble pump, pump must be isolated from system, by closing suction and discharge system valves, drained of liquid and cooled, if pump is handling hot liquid.

Never clean equipment with inflammable solvents or carbon tetrachloride. Protect yourself against toxic fumes when using cleaning agents.

6.2 Maintenance schedule

Ex It is recommended that a maintenance plan and schedule is adopted, in line with these User Instructions, to include the following:

a) Any auxiliary systems installed must be monitored, if necessary, to ensure they function correctly.
b) Check for any leaks from gaskets and seals. The correct functioning of the shaft seal must be checked regularly.
c) Check bearing lubricant level, and if the hours run show a lubricant change is required.
d) Check that the duty condition is in the safe operating range for the pump.
e) Check vibration, noise level and surface temperature at the bearings to confirm satisfactory operation.
f) Check dirt and dust is removed from areas around close clearances, bearing housings and motors.
g) Check coupling alignment and re-align if necessary.

FLOWSERVE specialist service personnel can help with preventative maintenance records and provide condition monitoring for temperature and vibration to identify the onset of potential problems.

If any problems are found the following sequence of actions should take place:

a) Refer to section 7, *Faults; causes and remedies*, for fault diagnosis.
b) Ensure equipment complies with the recommendations in this manual.
c) Contact Flowserve if the problem persists.

6.2.1 Routine inspection (daily/weekly)

CAUTION The following checks should be made and the appropriate action taken to remedy any deviations:

a) Check suction and discharge gauges.
b) Check for abnormal operating conditions (High/Low Temperature, Flows, Vibration, Pressures Etc.)
c) Check motor current/driver power.
d) Check that there are no abnormal fluids or lubricant leaks (static and dynamic seals) and that any sealant systems (if fitted) are full and operating normally.
e) Check that shaft seal leaks are within acceptable limits.
f) Check all lubricant levels i.e. bearing housing oilers, seal Plan 52/53, seal supply systems as applicable.
g) On grease lubricated pumps, check running hours since last recharge of grease or complete grease change.
h) Check any auxiliary supplies eg heating/cooling (if fitted) are functioning correctly.
i) Check stand by pump is at applicable temperature and available to start as required.

Refer to the manuals of any associated equipment for routine checks needed.

6.2.2 Periodic inspection (monthly)

a) Check for lubricant contamination whether bearing oil, or seal oil (if applicable) by sample analysis.
b) Check all paint or protective coatings.
c) Check all power/instrument cable glands for tightness.

Refer to the manuals of any associated equipment for periodic checks needed.

6.2.3 Periodic inspection (six monthly)

a) CAUTION Check foundation bolts for security of attachment, corrosion. Check grouting for looseness, cracking or general distress.
b) Change lubricants.
c) Check calibration of instruments.
d) The coupling should be checked for correct alignment and worn driving elements.

Refer to the manuals of any associated equipment for periodic checks needed.

6.2.4 Inspection (after 3 years)

a) Check internal condition of pump and all ancillary pipework for corrosion/erosion.
b) Check internal pump components for wear.
c) Change bearings

6.2.5 Re-lubrication

Lubricant and bearing temperature analysis can be useful in optimizing lubricant change intervals. In general however, the following is recommended.

6.2.5.1 Oil lubrication

CAUTION Maintaining the correct oil level is very important.

If the pump is supplied with a constant level oiler the oil level will be automatically maintained and as long as oil is visible in the glass bottle there is no need to refill. If however a sight glass has been fitted then regular checks should be made to ensure the level is maintained at the centre of the glass window.

Refer to section 5.1.1 for methods of oil fill, section 5.2.1 for oil grade recommendations and 5.2.4 for the schedule and temperature limits.

6.2.6 Mechanical seals

No adjustment is possible. When leakage reaches an unacceptable level the seal will need replacement.

6.3 Spare parts

6.3.1 Ordering of spares

Flowserve keep records of all pumps that have been supplied. When ordering spares the following information should be quoted:

1) Pump serial number
2) Pump size
3) Part name (a)
4) Part number (a)
5) Number of parts required

(a) Taken from the cross section drawing stored into the job user instruction book and only in case not available see at section 8.

The pump size and serial number are shown on the pump nameplate.
To ensure continued satisfactory operation, replacement parts to the original design specification should be obtained from Flowserve.
Any change to the original design specification (modification or use of a non-genuine part) will invalidate the pump's safety certification.

Note: ***If rings are ordered as repair parts after the pump has been put into service, undersized stationary rings or oversized impeller rings will not be furnished unless specifically requested by the customer.***

If undersize or oversize rings are desired, the amount of undersize or oversize required on the I.D. or the O.D. must be stated by the customer in the repair order**.**
It is recommended as insurance against delays that spare parts be purchased at the time the order for the complete unit is placed or as soon after receiving the pump as possible.

6.3.2 Storage of spares

Spares should be stored in a clean dry area away from vibration. Inspection and re-treatment of metallic surfaces (if necessary) with preservative is recommended at 6 monthly intervals

6.4 Recommended spares (according to API)

For start up purposes:

1 - set of bearings (line and thrust)
2 - sets of gaskets and o-ring
2 - wear rings set (2 rotating + 2 stationary)
1 - mechanical seals
1 - labyrinth set (drive and impeller end)

For normal maintenance:

1 - set of bearings (line and thrust)
2 - sets of gaskets and o-ring
2 - wear rings set (2 rotating + 2 stationary)
1 - mechanical seals
1 - labyrinth and deflector set (drive and impeller end)
1 - shaft
1 - impeller

6.5 Tools required

A typical range of tools that will be required to maintain these pumps is listed below

Readily available in standard tool kits, and dependent on pump size:

- Open ended spanners (wrenches) to suit up to 2" (M 50) screws/nuts
- Socket spanners (wrenches), up to 2" (M 50) screws
- Allen keys, up to 10 mm (A/F)
- Range of screwdrivers
- Soft mallet

6.6 Fastener torques

Steel Casing to Casing Cover B425 N08825 (Alloy 825) B473 S08020 (Alloy 20)		
Stud Size	Torque Value	
	N•m	(lb•ft)
3/8” 16UNC	9	(7)
1/2”13UNC	25	(18)
5/8” 11UNC	49	(36)
3/4” 10UNC	88	(65)
7/8” 9UNC	137	(101)
1” 8UNC	196	(145)
1 1/8” 8UN	304	(224)
1 1/4” 8UN	432	(318)
1 3/8” 8UN	589	(434)
1 1/2” 8UN	785	(579)
1 5/8” 8UN	1030	(759)
1 3/4” 8UN	1324	(976)
1 7/8” 8UN	1668	(1230)
2” 8UN	2060	(1519)
2 ¼” 8UN	2992	(2206)
2 ½” 8UN	4120	(3038)

Steel Casing to Casing Cover A182 F51 (Duplex) A276 S32760 (Super Duplex) B446 N06625 (Inconel 625) A193 B8M Class 2		
Stud Size	Torque Value	
	N•m	(lb•ft)
3/8” 16UNC	25	(18)
1/2”13UNC	59	(43)
5/8” 11UNC	118	(87)
3/4” 10UNC	196	(145)
7/8” 9UNC	294	(217)
1” 8UNC	491	(362)
1 1/8” 8UN	687	(506)
1 1/4” 8UN	981	(723)
1 3/8” 8UN	1275	(940)
1 1/2” 8UN	1570	(1157)
1 5/8” 8UN	2256	(1664)
1 3/4” 8UN	2943	(2170)
1 7/8” 8UN	3787	(2792)
2” 8UN	4415	(3255)
2 ¼” 8UN	5886	(4340)
2 ½” 8UN	7848	(5786)

Steel Casing to Casing Cover A193 B7 A193 B16 B865 N05500 (Monel K 500) 17/4 PH A576 S17400 H1025		
Stud Size	Torque Value	
	N•m	(lb•ft)
3/8” 16UNC	29	(22)
1/2”13UNC	78	(58)
5/8” 11UNC	147	(108)
3/4” 10UNC	245	(181)
7/8” 9UNC	392	(289)
1” 8UNC	638	(470)
1 1/8” 8UN	883	(651)
1 1/4” 8UN	1226	(904)
1 3/8” 8UN	1668	(1230)
1 1/2” 8UN	2060	(1519)
1 5/8” 8UN	2943	(2170)
1 3/4” 8UN	3728	(2749)
1 7/8” 8UN	4905	(3617)
2” 8UN	5396	(3978)
2 ¼” 8UN	7848	(5786)
2 ½” 8UN	10497	(7739)

Bronze and Cast Iron Casing to Casing Cover B148 C95200		
Stud Size	Torque Value	
	N•m	(lb•ft)
3/8” 16UNC	10	(7)
1/2”13UNC	20	(14)
5/8” 11UNC	39	(29)
3/4” 10UNC	69	(51)
7/8” 9UNC	118	(87)
1” 8UNC	177	(130)
1 1/8” 8UN	265	(195)
1 1/4” 8UN	373	(275)
1 3/8” 8UN	491	(362)
1 1/2” 8UN	687	(506)
1 5/8” 8UN	883	(651)
1 3/4” 8UN	1128	(832)
1 7/8” 8UN	1422	(1049)
2” 8UN	1717	(1266)
2 ¼” 8UN	2502	(1844)
2 ½” 8UN	3434	(2534)

Bronze and Cast Iron Casing to Casing Cover A536 60-40-18 A278 CL35		
Stud Size	Torque Value	
	N•m	(lb•ft)
3/8" 16UNC	15	(11)
1/2"13UNC	29	(22)
5/8" 11UNC	59	(43)
3/4" 10UNC	108	(80)
7/8" 9UNC	177	(130)
1" 8UNC	265	(195)
1 1/8" 8UN	392	(289)
1 1/4" 8UN	589	(434)
1 3/8" 8UN	785	(579)
1 1/2" 8UN	1030	(759)
1 5/8" 8UN	1324	(976)
1 3/4" 8UN	1717	(1266)
1 7/8" 8UN	2109	(1555)
2" 8UN	2600	(1917)
2 ¼" 8UN	3777	(2785)
2 ½" 8UN	5052	(3725)

Mechanical Seal to Casing Cover		
Stud/Nut Size	Torque Value	
	N•m	(lb•ft)
1/2"	44	32
5/8"	88	65
3/4"	169	125

Torque Values listed above are selected to achieve the correct amount of pre-stress in the threaded fastener. Maintenance personnel must ensure that threads are in good condition (free of burrs, galling, dirt, etc.) and that commercial thread lubricant NILS Wega 2 containing molybdenum disulfide is used. Torque should be periodically checked to ensure that it is at the recommended value.

6.7 Disassembly

Refer to section 1.6, *Safety*, before dismantling the pump.

CAUTION Before dismantling the pump for overhaul, ensure genuine Flowserve replacement parts are available.

Note: ***Refer to sectional drawings for part numbers and identification.***

Before attempting to disassemble the pump, the pump must be isolated from the system, by closing suction and discharge system valves, drained of liquid and cooled, if pump is handling hot liquid.

When the pump is handling "hot" liquid, extreme care must be taken to ensure the safety of personnel when attempting to drain pump. Hot pumps must be allowed to cool before draining.

When the pump is handling "caustic" liquid, extreme care must be taken to ensure the safety of personnel when attempting to drain pump. Protective devices of suitable protective materials must be worn when draining pump.

Before attempting any maintenance work on pumps in vacuum service, the pumps must be isolated from suction and discharge system then carefully vented to return pressure in pump casing to atmospheric pressure.

CAUTION ***Remove the pipe plug(s) from the top of the bearing housing(s) and check to see that oil rings are riding free on the pump shaft and are not hung up. Failure to observe this caution could result in damage to or destruction of equipment.***

6.7.1 Disassembly procedure

Care must be exercised in the dismantling operation to prevent damages to internal parts of the pump. Lay out all parts in the same order in which they are removed for convenience at reassembly.

Protect all machined faces against metal-to-metal contact and corrosion.

a) Switch off, lock and tag the motor circuit breakers.
b) Switch off, isolate and tag all instrumentation and monitoring equipment.
c) Close the pump suction valve. If discharge valve has not already been closed this must be done prior to dismantling.
d) Remove the pump coupling guard which is bolted to the baseplate.
e) Remove the pump coupling spacer (Refer to coupling instructions).
f) Drain the pump casing. This can be done by first opening the vent connections situated at the top of the casing and then opening the drains situated at the bottom of the casing.
g) Drain the bearing housings of oil by removing the drain plugs situated at the bottom of each bearing housing. Remove oilers.

Use caution when draining hot oil from bearing housing to prevent burns/injury to personnel.

h) Disconnect and remove seal flush pipework and allow to drain.
i) It is advisable to thoroughly drain and dry off the base plate before attempting any maintenance work on the pump.

⚠ ***This could eliminate the risk of slipping on a wet surface causing personal injury or mechanical damage.***

j) Remove pump monitoring equipment, auxiliary services or any other plant or equipment that may interfere with safe dismantling of the pump.
k) Loosen set screw securing coupling nut and remove nut.
l) Remove pump coupling hub, using a puller. Remove coupling key.
m) When cartridge type mechanical seals are used, loosen seal drive collar set screws. Insert first locking tab into seal sleeve groove. Consult mechanical seal manufacturer's instructions.
n) Proceed now with the dismantling of the pump following the steps listed below. For location of parts refer to pump sectional drawing and part list.

6.7.2 Thrust Bearing Disassembly

6.7.2.1 Ball Ball

a) Remove outer bearing cover.
b) Release locking tab of thrust bearing lock-washer.
c) Loosen and remove bearing lock nut and lock-washer.
d) Remove spacer together with slinger.
e) Unbolt screws fixing the inner cover.
f) Pull out thrust bearing housing.
g) Fit a bearing puller on the inner shield and pull out thrust bearing assembly together with inner bearing cover and shield.

6.7.2.2 Sleeve Ball

a) Remove fan guard and fan, if any.
b) Remove bolting securing end cover to bearing housing and remove cover.
c) Remove all bolting and taper pins holding upper half of thrust bearing housing and remove it. Use jack bolts and eyebolts for removal.
d) Unbolt calibrated screws and remove top half sleeve bearing.
e) Slide oil rings onto shaft apart from lower half sleeve bearing.
f) Carefully lift pump shaft just enough so that lower half sleeve bearing can be removed.
g) Unbolt and remove lower half of thrust bearing housing.
h) Release locking tab of thrust bearing lock-washer. Loosen and remove thrust bearing lock nut and lock-washer.
i) Remove thrust bearing assembly, using a puller that will bring pressure against inner bearing race only.
j) Remove oil rings. Unscrew set screws and remove inboard oil shield together with labyrinth ring.

6.7.2.3 KTB

a) Remove bolting securing end cover to bearing housing and remove cover along with outboard shim.
b) Remove all bolting and taper pins holding upper half of thrust bearing housing and remove it. Use jack bolts and eyebolts for removal.
c) Remove top half sleeve bearing.
d) Remove thrust shoes, levelling plates and split base rings. Consult Kingsbury's instructions.
e) Unscrew set screws and remove thrust collar locking nut.
f) Remove thrust collar and key. Remove inboard shim and oil seal in two halves.
g) Carefully lift pump shaft just enough so that lower half sleeve bearing can be removed.
h) Unbolt and remove lower half of thrust bearing housing.
i) Remove inboard labyrinth ring. Unscrew set screws and remove inboard oil shield.

6.7.3 Line Bearing Disassembly

6.7.3.1 Ball Ball

a) Unscrew grub screws and remove outer shield.
b) Unbolt outer bearing cover.
c) Release locking tab of line bearing lock- washer.
d) Loosen and remove bearing lock nut and lock-washer.
e) Remove spacer together with oil ring.
f) Unbolt inner cover fixing screws.
g) Pull out line bearing housing.
h) Fit a bearing puller on the inner shield and pull out line bearing, inner bearing cover and shield contemporary.

6.7.3.2 Sleeve Ball

a) Remove fan guard and fan, if any.
b) Remove all bolting and taper pins holding upper half of line bearing housing and remove it. Use jack bolts and eyebolts for removal.
c) Unbolt calibrated screws and remove top half sleeve bearing.

d) Slide oil rings onto shaft apart from lower half sleeve bearing
e) Carefully lift pump shaft just enough so that lower half sleeve bearing can be removed.
f) Unbolt and remove lower half of line bearing housing.
g) Unscrew set screws and remove inboard and outboard oil shields together with labyrinth rings. Remove oil rings.

6.7.3.3 KTB

a) Remove all bolting and taper pins holding upper half of line bearing housing and remove it. Use jack bolts and eyebolts for removal.
b) Remove top half sleeve bearing.
c) Carefully lift pump shaft just enough so that lower half sleeve bearing can be removed.
d) Unbolt and remove lower half of line bearing housing.
e) Remove inboard and outboard labyrinth rings. Unscrew set screws and remove inboard and outboard oil shields.

6.7.4 Rotor disassembly

a) Remove nuts holding seal plates to stuffing box at inboard and outboard pump end.
b) Clean shaft and carefully withdraw complete seal cartridges from the shaft.
c) Unbolt and remove outboard stuffing box. Use jack screws provided for the initial start of removal. Support stuffing box using an eye bolt and lifting gear, and remove from the casing ensuring that it does not swing down and damage the shaft.
d) Remove stuffing box gaskets.
e) The rotating element may now be withdrawn. It is essential that this operation is carried out as carefully as possible to avoid damage to the shaft and wear rings.
f) Unscrew 2nd impeller locking nut using a pin spanner wrench. Remove the nut.
g) Clean shaft and carefully withdraw 2nd stage impeller.

Note: ***If the impeller should grip the shaft before it is above the fit, do not attempt to force it the rest of the way, but instead allow the assembly to cool to room temperature and then reheat the impeller until it is free.***

h) Remove impeller key and central shaft sleeve.

6.8 Examination of parts

CAUTION Used parts must be inspected before assembly to ensure the pump will subsequently run properly.
In particular, fault diagnosis is essential to enhance pump and plant reliability.

6.8.1 Casing and Covers

a) Inspect for excessive wear, pitting, corrosion, erosion or damage and any sealing surface irregularities. Remove all scale and deposit in stuffing box water jackets by scraping and chemical treatment where necessary. New casing gasket should be installed whenever the pump is disassembled.
b) Replace as necessary.

6.8.2 Impeller

a) Remove worn impeller rings by mechanical turning.
b) Slightly eroded parts can be repaired by welding. Dynamically balance impellers after any machine work. To balance remove metal from the front or back shroud of the impeller at the point of unbalance.

PUMP TYPE HED/HED-DS
MINIMUM DIAMETER CLEARANCES

			Minimum Diameter Clearance						Minimum Diameter Clearance					
Wear ring. Nominal diameter			Temp. up to 260°C (500°F)						Temp. above 260°C (500°F)					
			Wear ring						Wear ring					
			Castlron /Bronze 12% Chr.Steel			316 Stn. Steel Carbon-Steel			Castlron/Bronze 12% Chr.Steel			316 Stn. Steel Carbon-Steel		
mm (in.)				mm			mm			mm			mm	
Up	To	50.8 (2.0)		0.26			0.39			0.39			0.51	
50.9 (2.0)	÷	63.4 (2.5)		0.28			0.41			0.41			0.53	
63.5 (2.5)	÷	76.1 (3.0)		0.30			0.43			0.43			0.55	
76.2 (3.0)	÷	88.8 (3.5)		0.36			0.49			0.49			0.61	
88.9 (3.5)	÷	126.9 (5)		0.40			0.53			0.53			0.65	
127 (5.0)	÷	152.3 (6.0)		0.43			0.56			0.56			0.68	
152.4 (6.0)	÷	177.7 (7.0)		0.46			0.59			0.59			0.71	
177.8 (7.0)	÷	203.1 (8.0)		0.48			0.60			0.60			0.73	
203.2 (8.0)	÷	228.5 (9.0)		0.50			0.63			0.63			0.75	
228.6 (9.0)	÷	253.9 (10.0)		0.53			0.66			0.66			0.78	
254 (10.0)	÷	279.3 (11.0)		0.56			0.69			0.69			0.81	
279.4 (11.0)	÷	304.7 (12.0)		0.59			0.72			0.72			0.84	
304.8 (12.0)	÷	330.1 (13.0)		0.61			0.74			0.74			0.86	
330.2 (13.0)	÷	355.5 (14.0)		0.64			0.77			0.77			0.89	
355.6 (14.0)	÷	380.9 (15.0)		0.66			0.79			0.79			0.91	

6.8.3 Mechanical seal

a) Mechanical seal stationary and rotating faces should be inspected for signs of wear or cracks and replaced as necessary.
b) It is recommended that when reassembling mechanical seal new "O" rings and gaskets be used.
c) Refer to manufacturers drawing for assembly of mechanical seal. Refer to mechanical seal section within this manual for further details.

6.8.4 Stuffing Box Bushings (If fitted)

a) Check the stuffing box bushes and replace if cocked and /or worn.
b) To replace, chill the new bushings to -20°C and install in the stuffing boxes

6.8.5 Shaft

When the pump is dismantled, examine the shaft carefully. Its condition should be checked at the impeller hub fit, deflectors and at the bearings. The shaft may become damaged by rusting or pitting because of leakage along the shaft at the impeller or shaft sleeve. Anti-friction bearing improperly fitted to the pump shaft will cause the inner race to rotate on the shaft.
Check the shaft keyway for distortion.
Excessive thermal stresses or corrosion may loosen the impeller on the shaft and subject the keyway to excessive shock. Replace a shaft that is bent or distorted. Check a shaft that has been repaired for possible runout (maximum 0.050 mm).
The shaft sleeve is subject to wear and may require replacement, depending on the severity of service
Replace if grooved, pitted or worn.

6.8.6 Gaskets and O-rings

After dismantling, discard and replace.

6.8.7 Bearings

6.8.7.1 Ball Ball

a) It is recommended that bearings are not re-used after any removal from the shaft. In any case the bearings must be replaced not after 25000 operating hours.
b) If the bearing cannot be removed with the tools available never use a torch under any circumstances. Split the outer ring with a small hand grinder, saw through the ball/roller retainer, and split the inner ring about three quarters through with a grinder and break with a cold steel chisel.

Note: ***Do not attempt to inspect condition of bearings until they have been cleaned.***

c) Solvent for cleaning bearings should be in a clean container. Place bearings in solvent and let soak for a short time. Agitate the bearing around near the top of the container, giving it a turn now and then until it is clean. Rinse in a clean container of fresh solvent.

Note: ***Do not spin dirty bearings. Rotate them slowly while washing.***

d) Dry thoroughly cleaned bearings. If an air hose is used for drying, make sure it is clean dry air.

Note: ***Do not allow the bearings to spin by force of air. Hold the inner and outer rings to prevent bearing from spinning.***

e) Inspect bearings immediately. If there is any question as to the condition of a bearing do not hesitate to replace it. There are many conditions that contribute to the deterioration of the bearings. A qualified bearing representative should be consulted if there is any question of bearing condition.

f) Inspected bearings which will be reused should be packed with new grease or dipped in clean lubricating oil, covered with clean lint free rags or other suitable covering and placed in a clean box or carton until ready for installation.

Note: ***Under no circumstances the bearings are to be left exposed.***

g) Thoroughly flush and clean the oil passages, then coat the inner surfaces with a thin film of lubricating oil. Remove all scale and deposit in the water circulation space, if provided, by scraping and chemical treatment when necessary. Cover the bearing bodies to keep them clean until ready for installation

6.8.7.2 Sleeve Ball

Anti-friction bearings are slightly shrunk on the shaft and a pulling device must be used to remove them. The pulling jaws or fingers must be located behind the shoulder of the inner race.

Unless extreme care is used when removing an anti-friction bearing, the bearing may be damaged to the extent that is no longer useable.

Always check the bearing immediately after removal for any imperfections or any play between the races. It is recommended that new bearings be used for replacement of removed bearings since very often damage caused by removal cannot be detected until the pump is put into operation.

When mounting anti-friction bearings on the pump shaft remember that the satisfactory operation of anti-friction bearings requires that the inner be firmly held on the shaft so that it cannot turn on the shaft.

Heat the bearing to expand the inner race and shrink it on the shaft.

Place bearings on a shelf in a temperature controlled oven. A temperature of 80° for one half hour should be sufficient.

Care must be taken to keep the bearing clean and uncontaminated.

Check the position of the bearing on the shaft with a feeler gage to make sure it is pressing firmly against the shoulder.

6.8.7.3 KTB

Babbitted sleeve bearings

The sleeve bearings supplied with the HED/HED-DS pump are of the split type and are easily removed or installed.

When removed, they should be cleaned in a suitable solvent. Use rags or cloth, as waste leaves lint which might cause trouble in the bearing.

A poorly cleaned bearing will score and wear out rapidly. A bearing surface is not clean until a cloth wiped over it shows no soil. Inspect all bearing parts after cleaning. Remove, with a scraper, any bruises on the babbitt faces before reassembling.

Kingsbury thrust bearing

For maintenance of the Kingsbury thrust bearing refer to the manufacturer's instructions.

6.8.8 Labyrinths or bearing isolators (if fitted)

a) The lubricant, bearings and bearing housing seals are to be inspected for contamination and damage. If oil bath lubrication is utilized, these provide useful information on operating conditions within the bearing housing.

b) If bearing damage is not due to normal wear and the lubricant contains adverse contaminants, the cause should be corrected before the pump is returned to service.

c) Labyrinth seals and bearing isolators should be inspected for damage but are normally non-wearing parts and can be re-used.
d) Bearing seals are not totally leak free devices. Oil from these may cause staining adjacent to the bearings.

6.9 Assembly

To assemble the pump consult the sectional drawings, see section 8, Parts list and drawings.
Ensure threads, gasket and O-ring mating faces are clean.

6.9.1 Wear rings

The impeller is fitted with both front and rear wear rings.
The impeller rings are renewable and should be replaced when badly grooved, and/or when pump performance does not meet the system requirements.
Whenever it becomes necessary to replace either wear ring, both rings involved (impeller and casing cover) must be ordered and replaced as a set as they are furnished standard size only.
Spare impeller wear rings are supplied with a material stock over outside diameter which has to be machined off after rings fitting on impeller.
If an impeller with its wear rings is ordered as spare, it will be supplied fully machined, including wear rings outside diameter, to original dimensions. Casing Cover wear rings are always supplied fully machined.
Be sure to re-establish the original running clearance between the two wear rings involved by machining the fitted impeller rings.

6.9.1.1 Impeller wear rings

a) To remove impeller wear rings, mutually remove wear ring set screws or ground off tack weld. Rings can be machined off or grind two slots diametrically opposite across the width of the ring so it can be split apart. Use caution if ring is removed by grinding so as not to damage impeller hubs.

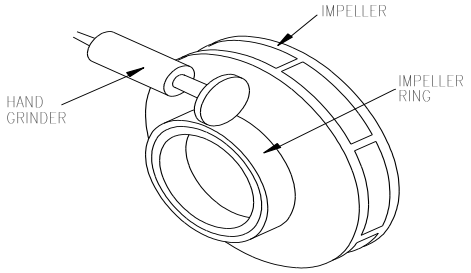

Figure 6.3

b) Make sure ring fits on impeller are free of nicks or burrs. Heat new ring to 107 °C (225 °F) and install on impeller. Drill and tap new holes in impeller spaced half the circular distance from the previously used holes in the impeller. See sketch below.

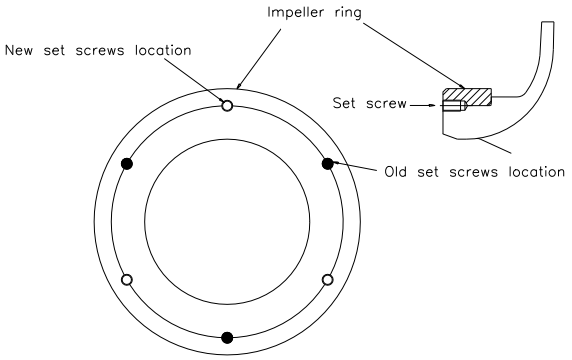

Figure 6.4

Note: ***Impeller wear rings when installed must be machined to establish original diameter and running clearance. Whenever an impeller has new wear rings fitted it must be dynamically balanced before being reassembled. Refer to the Cross Sectional drawing for the requested running clearance.***

Note: ***The impeller wear ring bore is relieved at one edge. Ensure that the ring is installed on the impeller so that the chamfered edge is sitting against the impeller.***

6.9.1.2 Casing cover wear rings

Each wear ring is locked against rotation with a cylindrical pin.
a) To remove the wear ring, press it out. If this method does not easily effect removal of the ring, it can be split apart. First, however, drill one or more holes in the face of the worn ring.

New rings to be installed must be shrunk by freezing -20°C (-4°F) when installing in casing cover. Fit and secure with a locking pin. Replacement wear rings are furnished standard size in the bore. Check the running clearance between impeller and casing ring against the appropriate value.

6.9.2 Rotor Assembly

a) Install central shaft sleeve onto the shaft.
b) Place 1st and 2nd stage impeller key in relevant shaft key-way.

Note: ***Take care to mount the impeller so that the vane tips point away from the apparent flow direction (See below fig).***

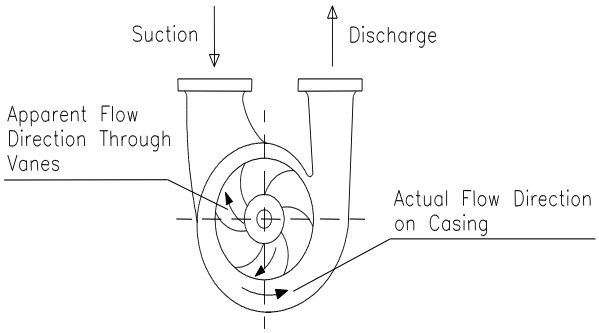

Figure 6.5

c) Install 2nd stage impeller against shaft shoulder.
d) Install 2nd stage impeller locking nut. Use a pin spanner wrench to tighten the nut.
e) Place rotor on "V" blocks or rolls and check with dial indicator wear rings for high spots or run out (0.13 mm max).
f) Replace shaft, complete with 2nd stage impeller through the casing; lifting gear will help in this operation).

CAUTION **Care must be taken not to nick or burr any components, especially running fits.**

g) Install 1st stage impeller against respective shaft shoulder.
h) Install 1st stage impeller locking nut. Use a pin spanner wrench to tighten the nut.
i) Place new gaskets onto the stuffing box cover flanges and offer the stuffing boxes to the casing.
j) Replace nuts and washers and tighten evenly until a face to face condition is achieved.
k) From the non-drive end push the rotor as far inboard as possible and scribe a line on the shaft in line with the stuffing box machined face. From the drive end push the rotor as far inboard as possible and scribe another line on the shaft. Move the rotor inboard again to halfway between these lines. This is the rotating element centred.
l) Replace mechanical seal cartridge (do not tighten).

6.9.3 Thrust and line bearings

Note: ***It is most important that all parts to be assembled have been thoroughly cleaned. Failure to comply may cause serious damage to the pump.***

6.9.3.1 Ball Ball

a) Install oil shields from each end of shaft, positioning them against their respective shaft shoulder.
b) Fit inner bearing covers with their labyrinth ring in place, and locate them against the shields.
c) Ensure that new gaskets are fitted.
d) Thrust and line bearings can now be fitted. Check the duplex bearings are mounted back-to-back.
e) Fit slinger, lock-washers and lock nuts. Tighten lock nuts and lock tab on lock-washers.
f) Install bearing housings sliding them over thrust and line bearings.
g) Locate bearing housings to their respective location on stuffing box brackets and tighten bolting.
h) Fix both inner bearing covers to bearing housings.
i) Position outer bearing covers and tighten bolting. Ensure that new gaskets are fitted.
j) Set labyrinth ring on line bearing cover and secure oil shield with set screws.
k) Install nuts securing mechanical seal plate assembly to stuffing box at both ends of pump. Tighten nuts evenly.
l) Finally set seal assemblies according the manufacturer's instructions.
m) Turn rotor by hand to ensure there are no rubs or binding.

6.9.3.2 Sleeve Ball

a) Place new gaskets onto the outboard stuffing box cover flange and suction diaphragm, and offer the stuffing box to the casing.
b) Replace nuts and washers and tighten evenly until a face to face condition is achieved. Any difficulty in pulling up the suction diaphragm should be investigated.
c) From the non-drive end push the rotor as far inboard as possible and scribe a line on the shaft in line with the stuffing box machined face. From the drive end push the rotor as far inboard as possible and scribe another line on the shaft. Move the rotor inboard again to halfway between these lines. This is the rotating element centred.
d) Replace mechanical seal cartridge (do not tighten).
e) Install inner oil shields together with respective labyrinth rings from each end of shaft, in their respective position. Fit "O" rings in labyrinth rings. Do not tighten oil shield set screws.
f) Slide in position onto shaft all sleeve bearing oil rings.
g) Fit thrust bearing assembly. Check duplex bearings are spaced and mounted back-to-back. Install between bearings rotating and stationary spacers together with the oil ring. Slide external sleeve over the bearings and bolt it to the stationary spacer. Make sure that side slot is in

top position to engage the parallel pin fitted on the upper half of thrust bearing housing.

h) Fit lock washer and lock nut. Tighten lock nut and lock tab on lock-washer.
i) Lift and install lower halves of thrust and line bearing housings against their respective seats on casing brackets. Tighten all bolting.
j) Pour a small amount of lubricating oil on lower halves of sleeve bearing linings. Raise shaft a slight amount and roll in lower halves of sleeve bearings. Position oil rings correctly.
k) Pour a small amount of oil on shaft journal bearings and install upper halves of sleeve bearings. Install and tighten calibrated screws.
l) Check that rotor turns freely by hand.
m) Apply a liquid gasket to bearing body joint faces and install upper halves of thrust and line bearing housings. Secure with bolting and dowels. Take care to position correctly in their respective seats, all oil seals and labyrinth rings.
n) Set oil shields on shaft by pushing them against labyrinths and withdrawing them about 3 mm. Secure with set screws.
o) Fit “O” ring in place, install thrust bearing outer cover and tighten bolting.
p) Install fan guard and fan, if any.
q) Check rotor end float. This should be 0.05 to 0.15 mm.
r) Install nuts securing mechanical seal plate assembly to stuffing box at both ends of pump. Tighten nuts evenly.
s) Finally set seal assemblies according the manufacturer’s instructions.
t) Turn rotor by hand to ensure there are no rubs or binding.

6.9.3.3 KTB

a) Install all oil shields together with respective labyrinth rings from each end of shaft, in their respective position. Fit “O” rings in labyrinth rings. Do not tighten oil shield set screws.
b) Lift and install lower halves of thrust and line bearing housings against their respective seats on stuffing box brackets. Tighten all bolting.
c) Pour a small amount of lubricating oil on lower halves of sleeve bearing linings. Raise shaft a slight amount and roll in lower halves of sleeve bearings.
d) Pour a small amount of oil on shaft journal bearings and install upper halves of sleeve bearings.
e) Install thrust bearing inboard seal in two halves.
f) Install inboard shim.
g) Install thrust collar key and thrust collar.
h) Install locknut and pull up tight against thrust collar, then fit securing screws to lock nut.
i) Install thrust bearings parts (split base rings, levelling plates and shoes) according Kingsbury’s instructions.
j) Check that rotor is axially centralized, and establish total thrust end play, (about 0.28 mm) by using shim or machining at inner face of thrust bearing cover. See Fig. 6.5

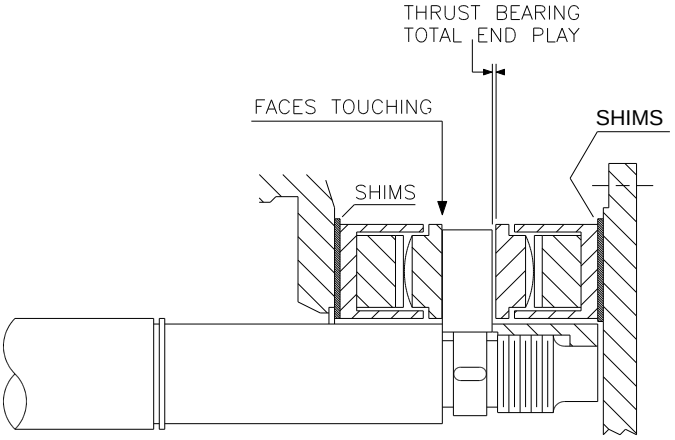

Figure 6.5

k) Apply a liquid gasket to bearing body joint faces and install upper halves of thrust and line bearing housings. Secure with bolting and dowels. Take care to position correctly in their respective seats, oil seals and labyrinth rings.
l) Set oil shields on shaft by pushing them against labyrinths and withdrawing them about 3 mm. Secure with set screws.
m) Fit “O” ring in place, install thrust bearing outer cover and tighten bolting.
n) Install nuts securing mechanical seal plate assembly to stuffing box at both ends of pump. Tighten nuts evenly.
o) Finally set seal assemblies according the manufacturer’s instructions.
p) Turn rotor by hand to ensure there are no rubs or binding.

6.9.4 Final assembly

a) Install coupling key and pump half coupling, coupling nut and coupling nut set screws.
b) Check coupling/shaft alignment as described under Section 4.5 and assemble coupling.
c) Install coupling guard.
d) Replace all auxiliary piping, instrumentation and pipe plugs.
e) Install oilers and fill bearing housings to correct oil level.
f) Refer to Section 5.

7 FAULTS; CAUSES AND REMEDIES

FAULT SYMPTOM

Pump overheats and seizes	Bearings have short life	Pump vibrates or is noisy	Mechanical seal has short life	Mechanical seal leaks excessively	Pump requires excessive power	Pump loses prime after starting	Insufficient pressure developed	Insufficient capacity delivered	Pump does not deliver liquid	PROBABLE CAUSES	POSSIBLE REMEDIES
										A. System troubles	
●									●	Pump not primed.	Check complete filling. Vent and/or prime.
		●				●		●	●	Pump or suction pipe not completely filled with liquid.	
		●				●		●	●	Suction lift too high or level too low.	Check NPSHa>NPSHr, proper submergence, losses at strainers/fittings.
●		●						●	●	Insufficient margin between suction pressure and vapour pressure.	
						●	●	●		Excessive amount of air or gas in liquid.	Check and purge pipes and system.
						●		●	●	Air or vapour pocket in suction line.	Check suction line design for vapour pockets.
						●		●		Air leaks into suction line.	Check suction pipe is airtight.
						●		●		Air leaks into pump through mechanical seal, sleeve joints, casing joint or pipe plugs.	Check and replace faulty parts. CONSULT FLOWSERVE.
		●						●		Foot valve too small.	Investigate replacing the foot valve.
		●						●		Foot valve partially clogged.	Clean foot valve.
		●				●		●	●	Inlet of suction pipe insufficiently submerged.	Check out system design.
							●	●	●	Speed too low.	CONSULT FLOWSERVE.
					●					Speed too high.	CONSULT FLOWSERVE.
							●	●	●	Total head of system higher than differential head of pump.	Check system losses. Remedy or CONSULT FLOWSERVE.
					●					Total head of system lower than pump design head.	
					●					Specific gravity of liquid different from design.	Check and CONSULT FLOWSERVE.
					●		●	●		Viscosity of liquid differs from that for which designed.	
●		●								Operation at very low capacity.	Measure value and check minimum permitted. Remedy or CONSULT FLOWSERVE.
	●	●			●					Operation at high capacity.	Measure value and check maximum permitted. Remedy or CONSULT FLOWSERVE.
										B. Mechanical troubles	
●	●	●	●	●	●					Misalignment due to pipe strain.	Check the flange connections and eliminate strains using elastic couplings or a method permitted.
		●								Improperly designed foundation.	Check setting of baseplate: tighten, adjust, grout base as required.
	●	●	●	●	●					Shaft bent.	Check shaft runouts are within acceptable values.

FAULT SYMPTOM

Pump overheats and seizes	Bearings have short life	Pump vibrates or is noisy	Mechanical seal has short life	Mechanical seal leaks excessively	Pump requires excessive power	Pump loses prime after starting	Insufficient pressure developed	Insufficient capacity delivered	Pump does not deliver liquid	PROBABLE CAUSES	POSSIBLE REMEDIES
											CONSULT FLOWSERVE.
●	●	●			●					Rotating part rubbing on stationary part internally.	Check and CONSULT FLOWSERVE, if necessary.
●	●	●	●	●						Bearings worn	Replace bearings.
					●		●	●		Wearing ring surfaces worn.	Replace worn wear ring/surfaces.
		●					●	●		Impeller damaged or eroded.	Replace or CONSULT FLOWSERVE for improved material selection.
				●						Leakage under sleeve due to joint failure.	Replace joint and check for damage.
			●	●	●					Mechanical seal improperly installed.	Check alignment of faces or damaged parts and assembly method used.
			●	●	●					Incorrect type of mechanical seal for operating conditions.	CONSULT FLOWSERVE.
●	●	●	●	●						Shaft running off centre because of worn bearings or misalignment.	Check misalignment and correct if necessary. If alignment satisfactory check bearings for excessive wear.
●	●	●	●	●						Impeller out of balance resulting in vibration.	Check and CONSULT FLOWSERVE.
			●	●	●					Abrasive solids in liquid pumped.	
			●	●						Internal misalignment of parts preventing seal ring and seat from mating properly.	
			●	●						Mechanical seal was run dry.	Check mechanical seal condition and source of dry running and repair.
			●	●						Internal misalignment due to improper repairs causing impeller to rub.	Check method of assembly, possible damage or state of cleanliness during assembly. Remedy or CONSULT FLOWSERVE, if necessary.
●	●	●								Excessive thrust caused by a mechanical failure inside the pump.	Check wear condition of impeller, its clearances and liquid passages.
	●	●								Excessive grease in ball bearings.	Check method of regreasing.
	●	●								Lack of lubrication for bearings.	Check hours run since last change of lubricant, the schedule and its basis.
	●	●								Improper installation of bearings (damage during assembly, incorrect assembly, wrong type of bearing etc).	Check method of assembly, possible damage or state of cleanliness during assembly and type of bearing used. Remedy or CONSULT FLOWSERVE, if necessary.
	●	●								Damaged bearings due to contamination.	Check contamination source and replace damaged bearings.
										C. MOTOR ELECTRICAL PROBLEMS	
		●			●		●	●		Wrong direction of rotation.	Reverse 2 phases at motor terminal box.
					●			●		Motor running on 2 phases only.	Check supply and fuses.
	●	●						●		Motor running too slow.	Check motor terminal box connections and voltage.

8 PARTS LIST AND DRAWINGS

8.1 HED Antifriction Bearing + Slinger Lubrication

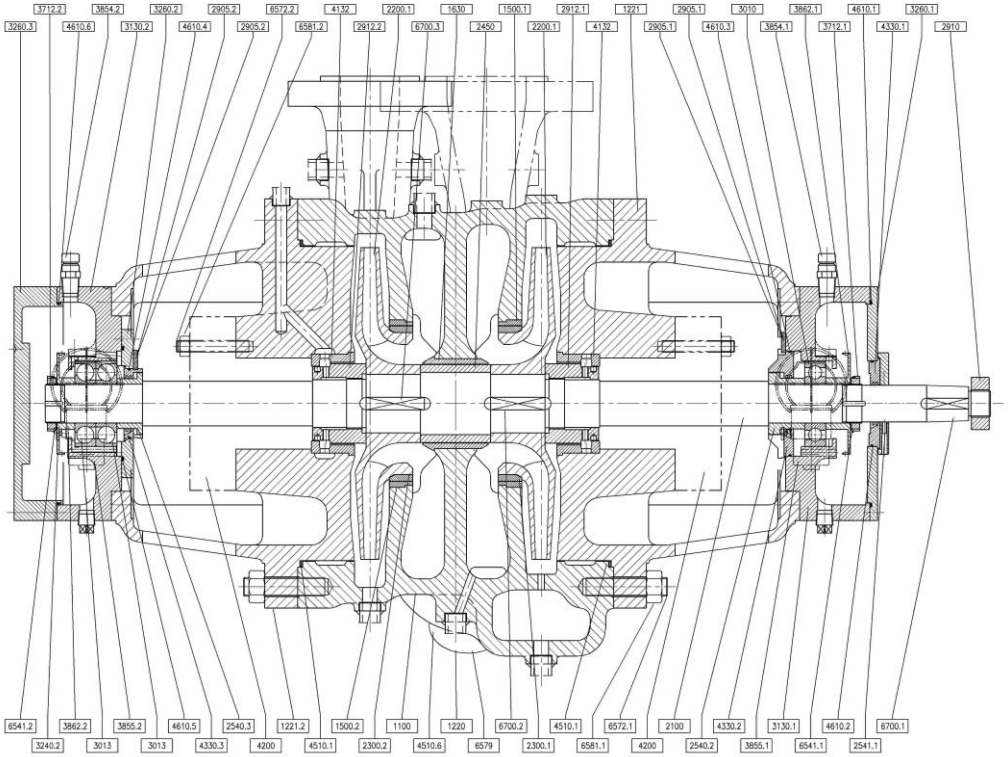

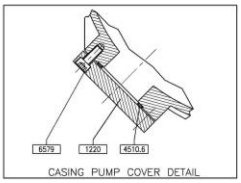

8.1.1 Parts list

Ref no	Description
2912.1	Impeller Nut
2910	Shaft Nut
2905.2	Washer
2905.1	Washer
2541.1	Deflector
2540.3	Deflector
2540.2	Deflector
2450	Shaft Sleeve
2300.2	Impeller Wear Ring
2300.1	Impeller Wear Ring
2200.1	Impeller
2100	Shaft
1630	Throttling Bush
1500.2	Casing Wear Ring
1500.1	Casing Wear Ring
1221.2	Casing Cover
1221	Casing Cover
1220	Cover
1100	Casing
6700.3	Key

Ref no	Description
4200	Mechanical Seal
4132	Stuffing Box Bushing
3862.2	Lubricating Disk Thrower
3862.1	Lubricating Disk Thrower
3855.2	Constant Level Oiler
3855.1	Constant Level Oiler
3854.2	Oil Filter Plug
3854.1	Oil Filter Plug
3712.2	Bearing Nut
3712.1	Bearing Nut
3260.3	Bearing Cover
3260.2	Bearing Cover
3260.1	Bearing Cover
3240.2	Intermediate Bearing Sleeve
3130.2	Bearing Bracket
3130.1	Bearing Bracket
3013	Thrust Ball Bearing
3010	Anti-Friction Bearing
2912.2	Impeller Nut
6700.2	Key

Ref no	Description
6700.1	Key
6581.2	Hexagon Nut
6581.1	Hexagon Nut
6579	Socket Head Cap Screw
6572.2	Stud
6572.1	Stud
6541.2	Lockwasher
6541.1	Lockwasher
4610.6	‘O’-Ring
4610.5	‘O’-Ring
4610.4	‘O’-Ring
4610.3	‘O’-Ring
4610.2	‘O’-Ring
4610.1	‘O’-Ring
4510.6	Gasket
4510.1	Gasket
4330.3	Labyrinth Ring
4330.2	Labyrinth Ring
4330.1	Labyrinth Ring

8.2 HED-DS Antifriction Bearing + Slinger Lubrication

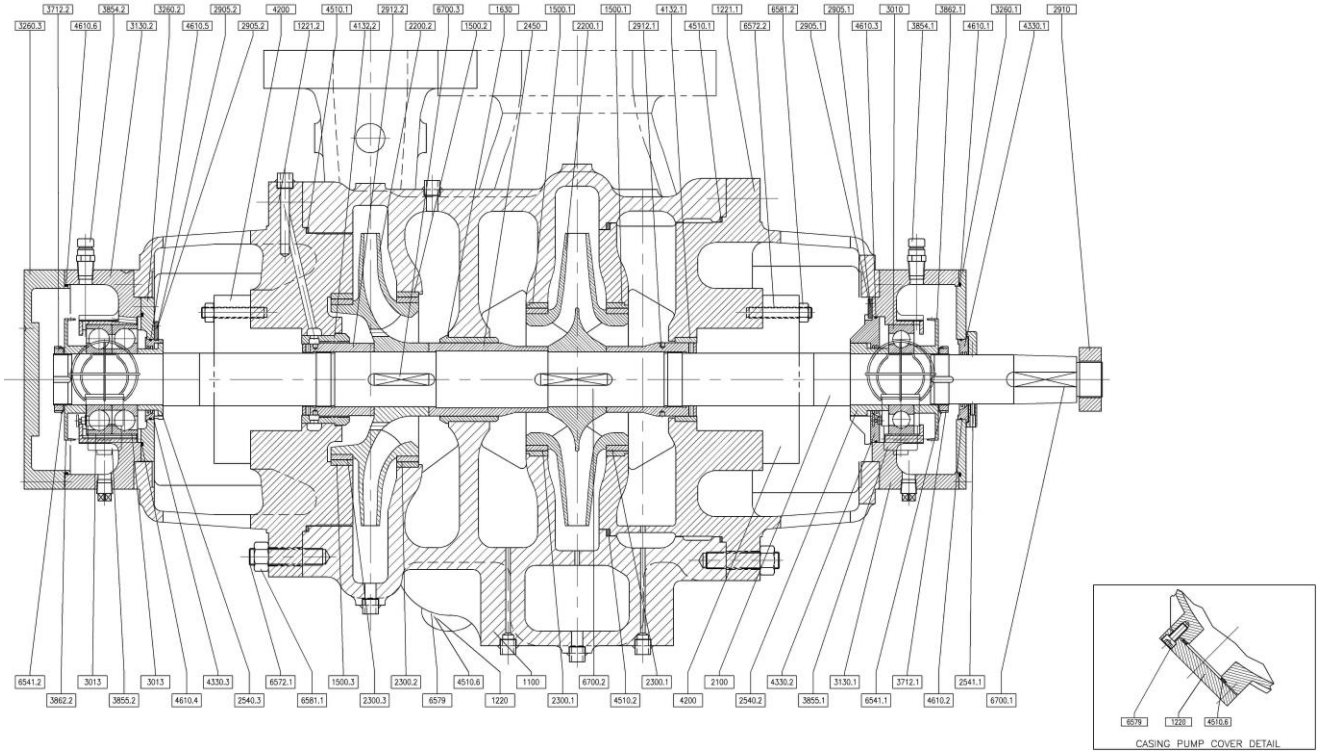

8.2.1 Parts list

Ref no	Description
2905.1	Washer
2541.1	Deflector
2540.3	Deflector
2540.2	Deflector
2450	Shaft Sleeve
2300.3	Impeller Wear Ring
2300.2	Impeller Wear Ring
2300.1	Impeller Wear Ring
2200.2	Impeller
2200.1	Impeller
2100	Shaft
1630	Throttling Bush
1500.3	Casing Wear Ring
1500.2	Casing Wear Ring
1500.1	Casing Wear Ring
1221.2	Casing Cover
1221.1	Casing Cover
1220	Cover
1100	Casing
6700.3	Key
6700.2	Key

Ref no	Description
3862.2	Lubricating Disk Thrower
3862.1	Lubricating Disk Thrower
3855.2	Constant Lever Oiler
3855.1	Constant Level Oiler
3854.2	Oil Filter Plug
3854.1	Oil Filter Plug
3712.2	Bearing Nut
3712.1	Bearing Nut
3260.3	Bearing Cover
3260.2	Bearing Cover
3260.1	Bearing Cover
3130.2	Bearing Bracket
3130.1	Bearing Bracket
3013	Thrust Ball Bearing
3010	Anti-Friction Bearing
2912.2	Impeller Nut
2912.1	Impeller Nut
2910	Shaft Nut
2905.2	Washer
6700.1	Key
6581.2	Hexagon Nut

Ref no	Description
6572.2	Stud
6572.1	Stud
6541.2	Lockwasher
6541.1	Lockwasher
4610.6	‘O’-Ring
4610.5	‘O’-Ring
4610.4	‘O’-Ring
4610.3	‘O’-Ring
4610.2	‘O’-Ring
4610.1	‘O’-Ring
4510.6	Gasket
4510.2	Gasket
4510.1	Gasket
4330.3	Labyrinth Ring
4330.2	Labyrinth Ring
4330.1	Labyrinth Ring
4200	Mechanical Seal
4132.2	Stuffing Box Bushing
4132.1	Stuffing Box Bushing
6581.1	Hexagon Nut
6579	Socket Head Screw

8.3 HED-DS Antifriction Bearing + Oil Mist Lubrication

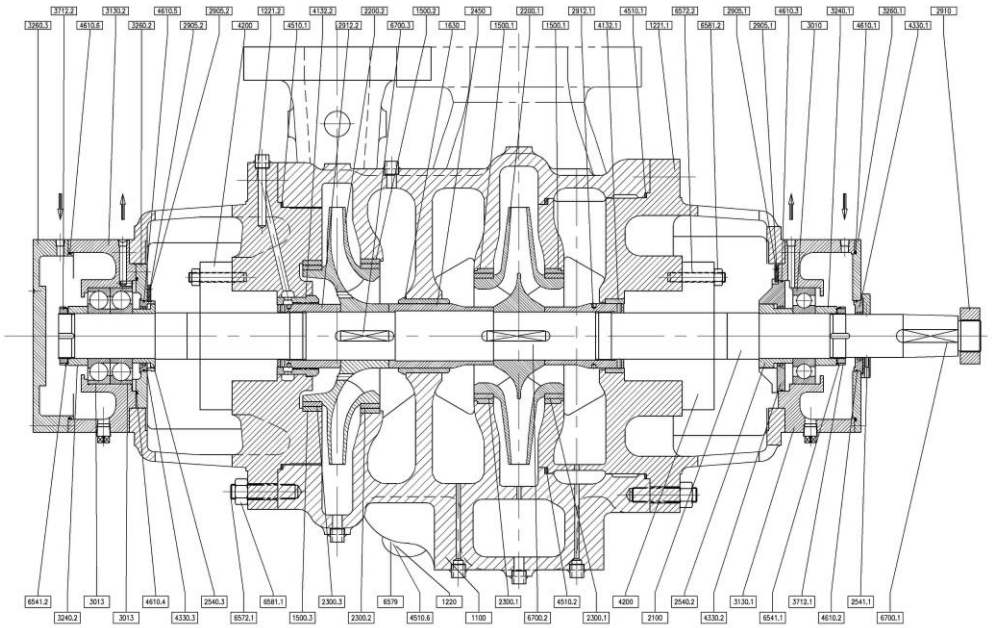

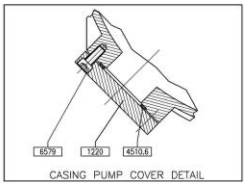

8.3.1 Parts list

Ref no	Description
2905.1	Washer
2541.1	Deflector
2540.3	Deflector
2540.2	Deflector
2450	Shaft Sleeve
2300.3	Impeller Wear Ring
2300.2	Impeller Wear Ring
2300.1	Impeller Wear Ring
2200.2	Impeller
2200.1	Impeller
2100	Shaft
1630	Throttling Bush
1500.3	Casing Wear Ring
1500.2	Casing Wear Ring
1500.1	Casing Wear Ring
1221.2	Casing Cover
1221.1	Casing Cover
1220	Cover
1100	Casing
6700.3	Key

Ref no	Description
4330.1	Labyrinth Ring
4200	Mechanical seal
4132.2	Stuffing Box Bushing
4132.1	Stuffing Box Bushing
3712.2	Bearing Nut
3712.1	Bearing Nut
3260.3	Bearing Cover
3260.2	Bearing Cover
3260.1	Bearing Cover
3240.2	Intermediate Bearing Sleeve
3240.1	Intermediate Bearing Sleeve
3130.2	Bearing Bracket
3130.1	Bearing Bracket
3013	Thrust Ball Bearing
3010	Anti-Friction Bearing
2912.2	Impeller Nut
2912.1	Impeller Nut
2910	Shaft Nut
2905.2	Washer
6700.2	Key

Ref no	Description
6700.1	Key
6581.2	Hexagon Nut
6581.1	Hexagon Nut
6579	Socket head Cap Screw
6572.2	Stud
6572.1	Stud
6541.2	Lockwasher
6541.1	Lockwasher
4610.6	‘O’-Ring
4610.5	‘O’-Ring
4610.4	‘O’-Ring
4610.3	‘O’-Ring
4610.2	‘O’-Ring
4610.1	‘O’-Ring
4510.6	Gasket
4510.2	Gasket
4510.1	Gasket
4330.3	Labyrinth Ring
4330.2	Labyrinth Ring

8.4 HED-DS Antifriction Bearing + Slinger Lubrication + Fan Cooling

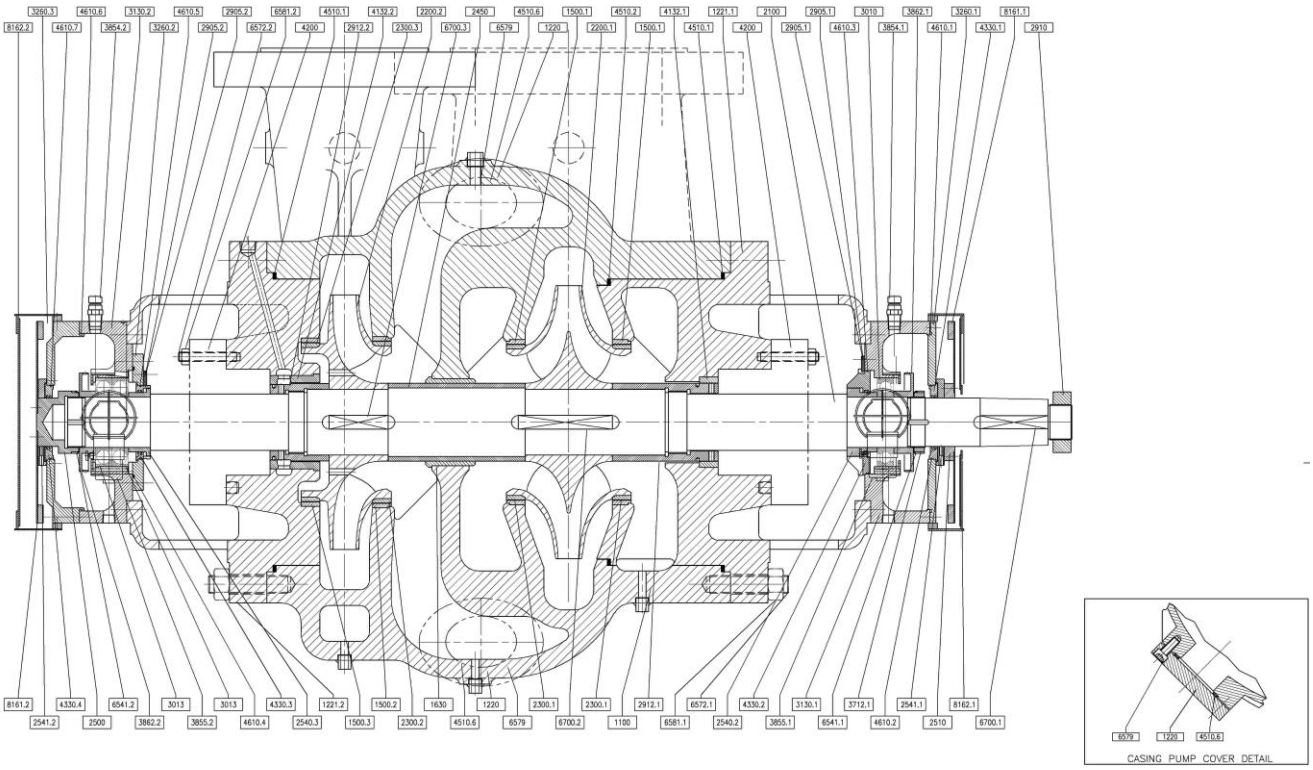

8.4.1 Parts list

Ref no	Description
2540.3	Deflector
2540.2	Deflector
2510	Spacer Ring
2500	Ring
2450	Shaft Sleeve
2300.3	Impeller Wear Ring
2300.2	Impeller Wear Ring
2300.1	Impeller Wear Ring
2200.2	Impeller
2200.1	Impeller
2100	Shaft
1630	Throttling Bush
1500.3	Casing Wear Ring
1500.2	Casing Wear Ring
1500.1	Casing Wear Ring
1221.2	Casing Cover
1221.1	Casing Cover
1220	Cover
1100	Casing
8162.2	Cover
8162.1	Cover
8161.2	Fan
8161.1	Fan
6541.2	Lockwasher

Ref no	Description
3855.2	Constant Level Oiler
3855.1	Constant Level Oiler
3854.2	Oil Filter plug
3854.1	Oil Filter plug
3712.1	Bearing Nut
3260.3	Bearing Cover
3260.2	Bearing Cover
3260.1	Bearing Cover
3130.2	Bearing Bracket
3130.1	Bearing Bracket
3013	Thrust Ball Bearing
3010	Anti-Friction Bearing
2912.2	Impeller Nut
2912.1	Impeller Nut
2910	Shaft Nut
2905.2	Washer
2905.1	Washer
2541.2	Deflector
2541.1	Deflector
6700.3	Key
6700.2	Key
6700.1	Key
6581.2	Hexagon Nut
6541.1	Lockwasher

Ref no	Description
4610.7	‘O’-Ring
4610.6	‘O’-Ring
4610.5	‘O’-Ring
4610.4	‘O’-Ring
4610.3	‘O’-Ring
4610.2	‘O’-Ring
4610.1	‘O’-Ring
4510.6	Gasket
4510.2	Gasket
4510.1	Gasket
4330.4	Labyrinth Ring
4330.3	Labyrinth Ring
4330.2	Labyrinth Ring
4330.1	Labyrinth Ring
4200	Mechanical Seal
4132.2	Stuffing Box Bushing
4132.1	Stuffing Box Bushing
3862.2	Lubricating Disk Thrower
3862.1	Lubricating Disk Thrower
6581.1	Hexagon Nut
6579	Socket Head Cap Screw
6572.2	Stud
6572.1	Stud

8.5 HED-DS Antifriction Bearing + Oil Mist Lubrication + Fan Cooling

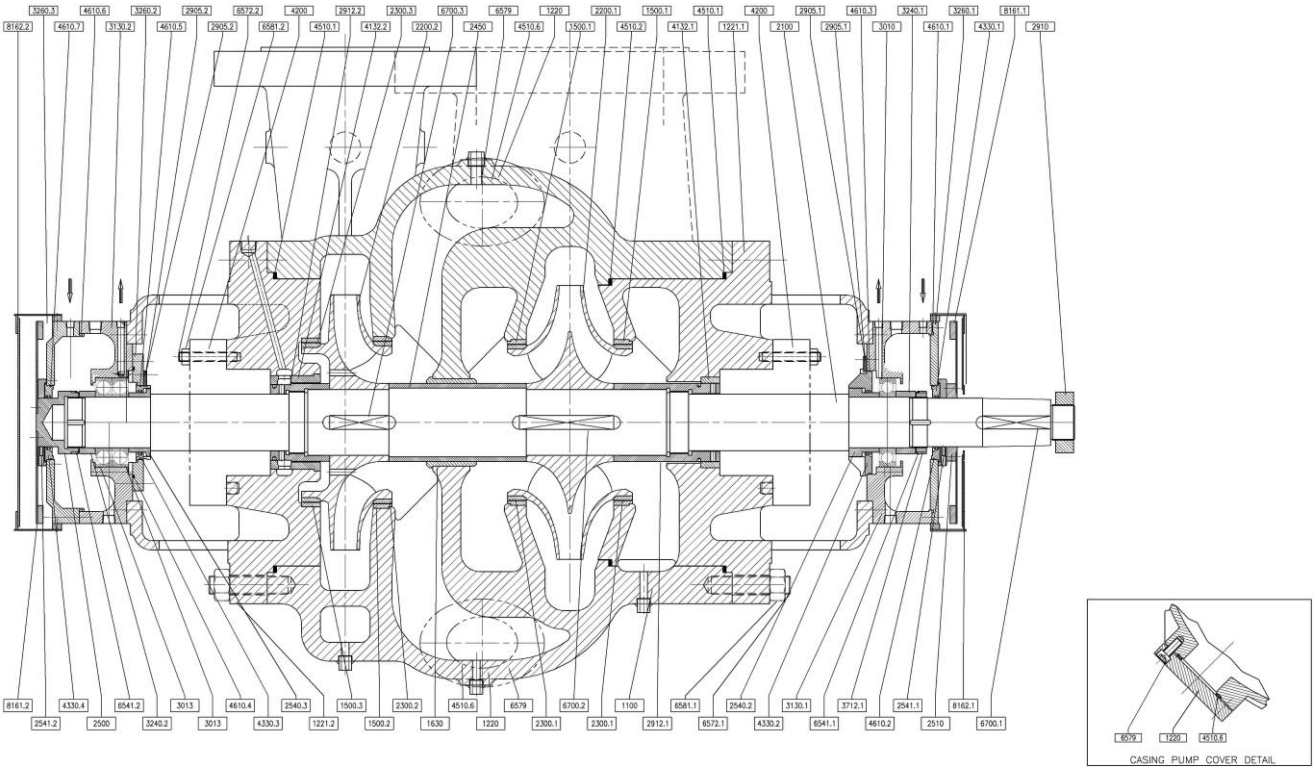

8.5.1 Parts list

Ref no	Description
2540.3	Deflector
2540.2	Deflector
2510	Spacer Ring
2500	Ring
2450	Shaft Sleeve
2300.3	Impeller Wear Ring
2300.2	Impeller Wear Ring
2300.1	Impeller Wear Ring
2200.2	Impeller
2200.1	Impeller
2100	Shaft
1630	Throttling Bush
1500.3	Casing Wear Ring
1500.2	Casing Wear Ring
1500.1	Casing Wear Ring
1221.2	Casing Cover
1221.1	Casing Cover
1220	Cover
1100	Casing
8162.2	Cover
8162.1	Cover
8161.2	Fan
6579	Socked Head Cap Screw

Ref no	Description
4132.2	Stuffing Box Bushing
4132.1	Stuffing Box Bushing
3712.1	Bearing Nut
3260.3	Bearing Cover
3260.2	Bearing Cover
3260.1	Bearing Cover
3240.2	Intermediate Bearing Sleeve
3240.1	Intermediate Bearing Sleeve
3130.2	Bearing Bracket
3130.1	Bearing Bracket
3013	Thrust Ball Bearing
3010	Anti-Friction Bearing
2912.2	Impeller Nut
2912.1	Impeller Nut
2910	Shaft nut
2905.2	Washer
2905.1	Washer
2541.2	Deflector
2541.1	Deflector
8161.1	Fan
6700.3	Key
6700.2	Key

Ref no	Description
6572.2	Stud
6572.1	Stud
6541.2	Lockwasher
6541.1	Lockwasher
4610.7	‘O’-Ring
4610.6	‘O’-Ring
4610.5	‘O’-Ring
4610.4	‘O’-Ring
4610.3	‘O’-Ring
4610.2	‘O’-Ring
4610.1	‘O’-Ring
4510.6	Gasket
4510.2	Gasket
4510.1	Gasket
4330.4	Labyrinth Ring
4330.3	Labyrinth Ring
4330.2	Labyrinth Ring
4330.1	Labyrinth Ring
4200	Mechanical Seal
6700.1	Key
6581.2	Hexagon Nut
6581.1	Hexagon Nut

8.6 HED-DS Antifriction Bearing + Slinger Lubrication + Water Cooling

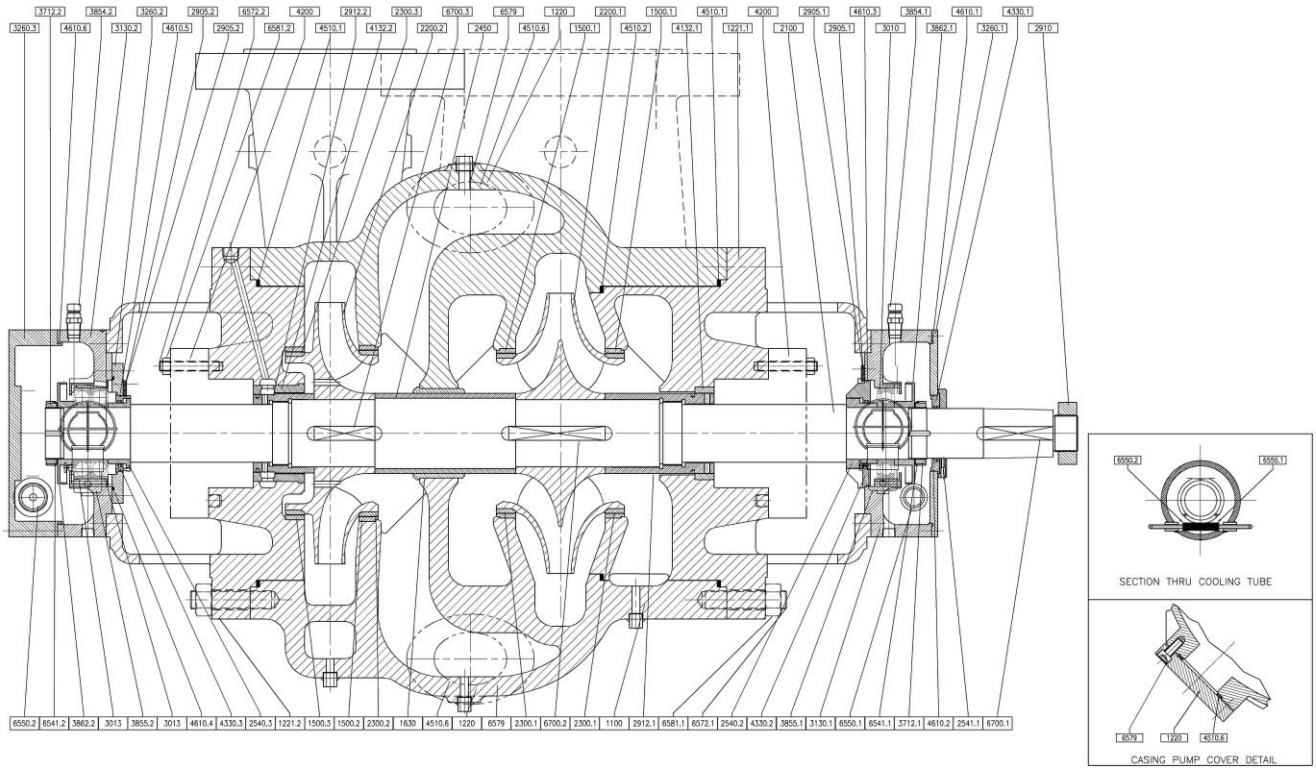

8.6.1 Parts list

Ref no	Description
2905.1	Washer
2541.1	Deflector
2540.3	Deflector
2540.2	Deflector
2540	Shaft Sleeve
2300.3	Impeller Wear Ring
2300.2	Impeller Wear Ring
2300.1	Impeller Wear Ring
2200.2	Impeller
2200.1	Impeller
2100	Shaft
1630	Throttling Bush
1500.3	Casing Wear Ring
1500.2	Casing Wear Ring
1500.1	Casing Wear Ring
1221.2	Casing Cover
1221.1	Casing Cover
1220	Cover
1100	Casing
6700.3	Key
6700.2	Key
6700.1	Key

Ref no	Description
3862.2	Lubricating Disk Thrower
3862.1	Lubricating Disk Thrower
3855.2	Constant Level Oiler
3855.1	Constant Level Oiler
3854.2	Oil Filter Plug
3854.1	Oil Filter Plug
3712.2	Bearing Nut
3712.1	Bearing Nut
3260.3	Bearing Cover
3260.2	Bearing Cover
3260.1	Bearing Cover
3130.2	Bearing Bracket
3130.1	Bearing Bracket
3013	Thrust Ball Bearing
3010	Anti-Friction Bearing
2912.2	Impeller Nut
2912.1	Impeller Nut
2910	Shaft Nut
2905.2	Washer
6581.2	Hexagon Nut
6581.1	Hexagon Nut
6579	Socket Head Cap Screw

Ref no	Description
6550.2	Cooling Device
6550.1	Cooling Device
6541.2	Lockwasher
6541.1	Lockwasher
4610.6	‘O’-Ring
4610.5	‘O’-Ring
4610.4	‘O’-Ring
4610.3	‘O’-Ring
4610.2	‘O’-Ring
4610.1	‘O’-Ring
4510.6	Gasket
4510.2	Gasket
4510.1	Gasket
4330.3	Labyrinth Ring
4330.2	Labyrinth Ring
4330.1	Labyrinth Ring
4200	Mechanical Seal
4132.2	Stuffing Box Bushing
4132.1	Stuffing Box Bushing
6572.2	Stud
6572.1	Stud

8.7 HED-DS Antifriction Bearing + Slinger Lubrication + Inpro Seals

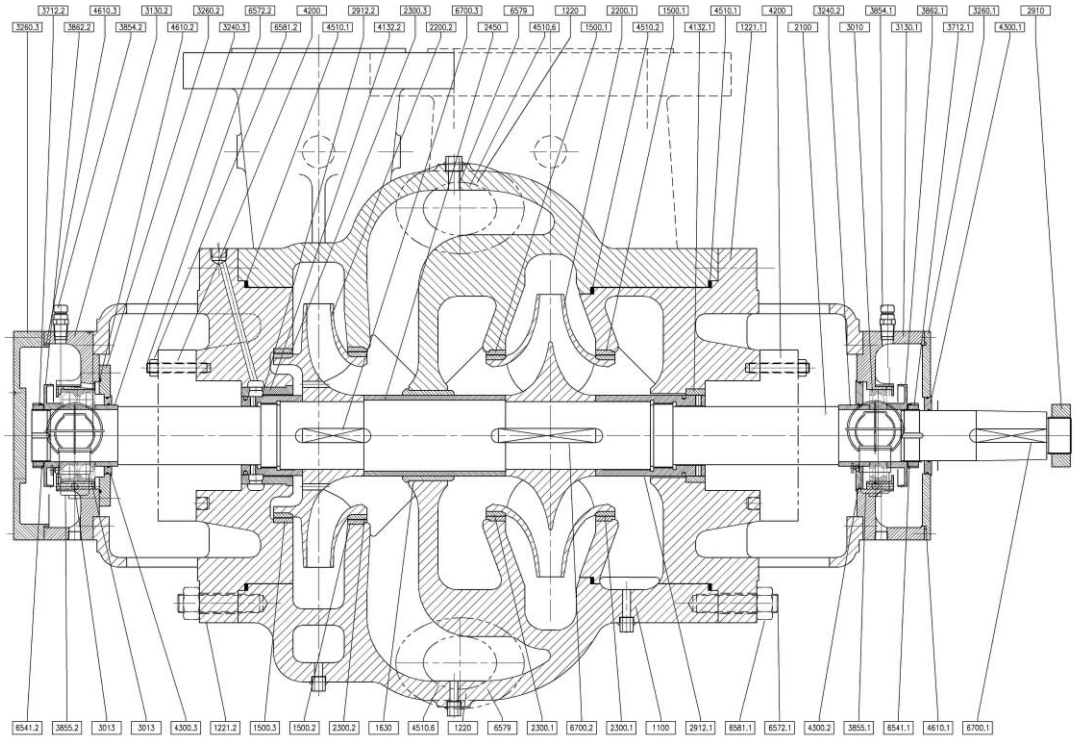

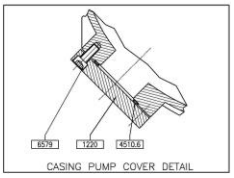

8.7.1 Parts list

Ref no	Description
3010	Anti-Friction Bearing
2912.2	Impeller Nut
2912.1	Impeller Nut
2910	Shaft Nut
2450	Shaft Sleeve
2300.3	Impeller Wear Ring
2300.2	Impeller Wear Ring
2300.1	Impeller Wear Ring
2200.2	Impeller
2200.1	Impeller
2100	Shaft
1630	Throttling Bush
1500.3	Casing Wear Ring
1500.2	Casing Wear Ring
1500.1	Casing Wear Ring
1221.2	Casing Cover
1221.1	Casing Cover
1220	Cover
1100	Casing

Ref no	Description
4200	Mechanical Seal
4132.2	Stuffing Box Bushing
4132.1	Stuffing Box Bushing
3862.2	Lubricating Disk Thrower
3862.1	Lubricating Disk Thrower
3855.2	Constant Level Oiler
3855.1	Constant Level Oiler
3854.2	Oil Filter Plug
3854.1	Oil Filter Plug
3712.2	Bearing Nut
3712.1	Bearing Nut
3260.3	Bearing Cover
3260.2	Bearing Cover
3260.1	Bearing Cover
3240.3	Intermediate Bearing Sleeve
3240.2	Intermediate Bearing Sleeve
3130.2	Bearing Bracket
3130.1	Bearing Bracket
3013	Thrust Ball Bearing

Ref no	Description
6700.3	Key
6700.2	Key
6700.1	Key
6581.2	Hexagon Nut
6581.1	Hexagon Nut
6579	Socket Head Cap Screw
6572.2	Stud
6572.1	Stud
6541.2	Lockwasher
6541.1	Lockwasher
4610.3	‘O’-Ring
4610.2	‘O’-Ring
4610.1	‘O’-Ring
4510.6	Gasket
4510.2	Gasket
4510.1	Gasket
4300.3	Bearing Isolator
4300.2	Bearing Isolator
4300.1	Bearing Isolator

8.8 HED-DS Antifriction Bearing + Oil Mist Lubrication + Inpro Seals

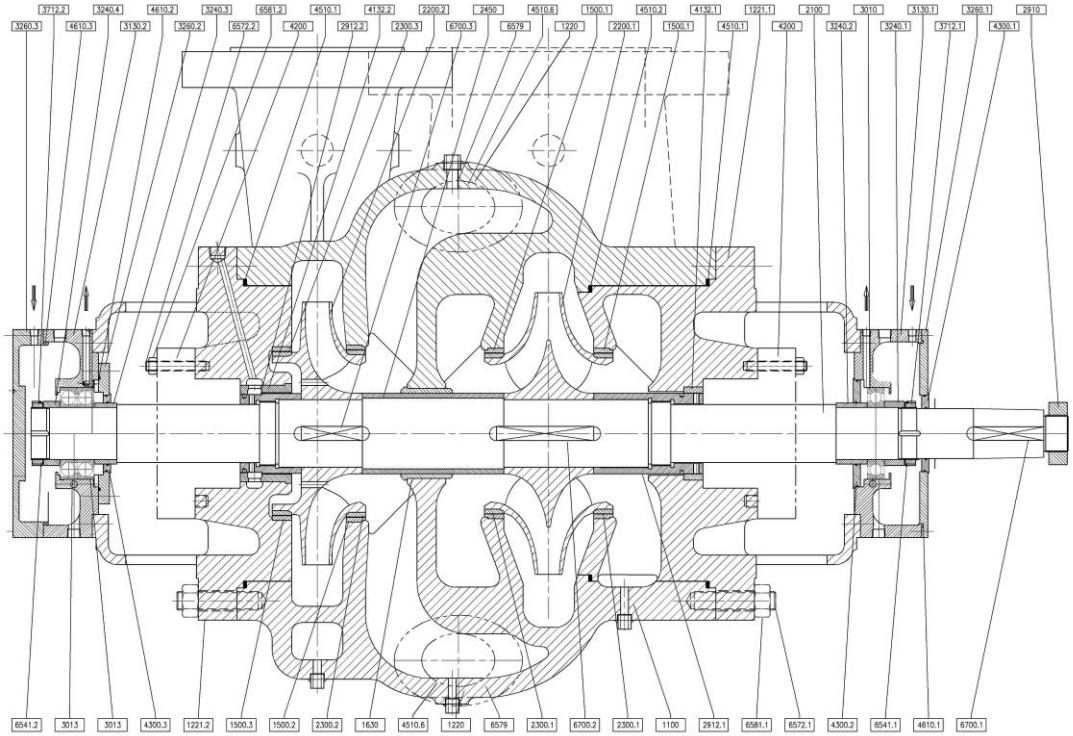

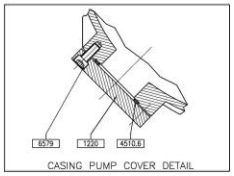

8.8.1 Parts list

Ref no	Description
3010	Anti-Friction Bearing
2912.2	Impeller Nut
2912.1	Impeller Nut
2910	Shaft Nut
2450	Shaft Sleeve
2300.3	Impeller Wear Ring
2300.2	Impeller Wear Ring
2300.1	Impeller Wear Ring
2200.2	Impeller
2200.1	Impeller
2100	Shaft
1630	Throttling Bush
1500.3	Casing Wear Ring
1500.2	Casing Wear Ring
1500.1	Casing Wear Ring
1221.2	Casing Cover
1221.1	Casing Cover
1220	Cover

Ref no	Description
4510.1	Gasket
4300.3	Bearing Isolator
4300.2	Bearing Isolator
4300.1	Bearing Isolator
4200	Mechanical Seal
4132.2	Stuffing Box Bushing
4132.1	Stuffing Box Bushing
3712.2	Bearing Nut
3712.1	Bearing Nut
3260.3	Bearing Cover
3260.2	Bearing Cover
3260.1	Bearing Cover
3240.4	Intermediate Bearing Sleeve
3240.3	Intermediate Bearing Sleeve
3240.2	Intermediate Bearing Sleeve
3240.1	Intermediate Bearing Sleeve
3130.2	Bearing Bracket
3130.1	Bearing Bracket

Ref no	Description
6700.3	Key
6700.2	Key
6700.1	Key
6581.2	Hexagon Nut
6581.1	Hexagon Nut
6579	Socket Head Cap Screw
6572.2	Stud
6572.1	Stud
6541.2	Lockwasher
6541.1	Lockwasher
4610.3	‘O’-Ring
4610.2	‘O’-Ring
4610.1	‘O’-Ring
4510.6	Gasket
4510.2	Gasket
3013	Thrust Ball Bearing
1100	Casing

8.9 HED-DS Antifriction Bearing + Slinger Lubrication + Inpro Seals + Fan Cooling

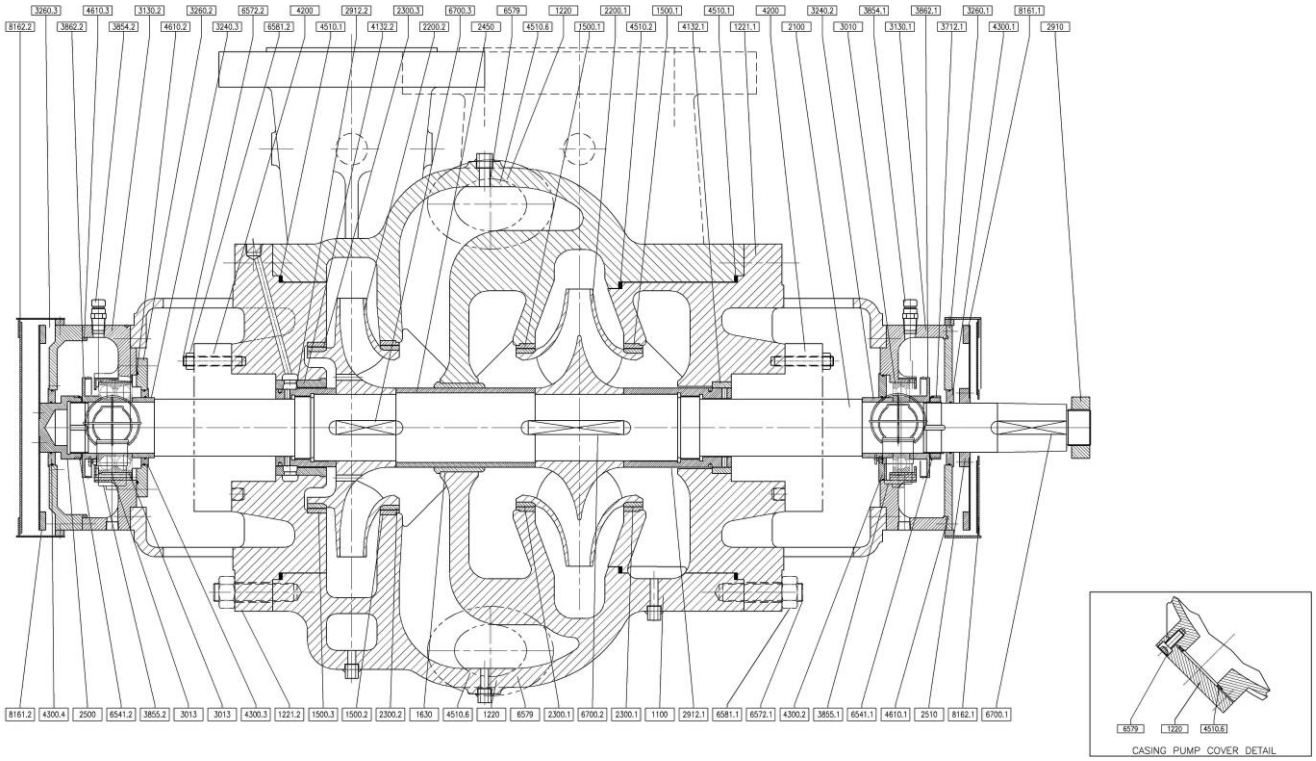

8.9.1 Parts list

Ref no	Description
2912.1	Impeller Nut
2910	Shaft Nut
2510	Spacer Ring
2500	Ring
2450	Shaft Sleeve
2300.3	Impeller Wear Ring
2300.2	Impeller Wear Ring
2300.1	Impeller Wear Ring
2200.2	Impeller
2200.1	Impeller
2100	Shaft
1630	Throttling Bush
1500.3	Casing Wear Ring
1500.2	Casing Wear Ring
1500.1	Casing Wear Ring
1221.2	Casing Cover
1221.1	Casing Cover
1220	Cover
1100	Casing
8162.2	Cover
8162.1	Cover

Ref no	Description
4132.2	Stuffing Box Bushing
4132.1	Stuffing Box Bushing
3862.2	Lubrication Disk Thrower
3862.1	Lubrication Disk Thrower
3855.2	Constant Level Oiler
3855.1	Constant Level Oiler
3854.2	Oil Filter Plug
3854.1	Oil Filter Plug
3712.1	Bearing Nut
3260.3	Bearing Cover
3260.2	Bearing Cover
3260.1	Bearing Cover
3240.3	Intermediate Bearing Sleeve
3240.2	Intermediate Bearing Sleeve
3130.2	Bearing Bracket
3130.1	Bearing Bracket
3013	Thrust Ball Bearing
3010	Anti-Friction Bearing
2912.2	Impeller Nut
8161.2	Fan
8161.1	Fan

Ref no	Description
6700.1	Key
6581.2	Hexagon Nut
6581.2	Hexagon Nut
6579	Socket Head Cap Screw
6572.2	Stud
6572.1	Stud
6541.2	Lockwasher
6541.1	Lockwasher
4610.3	‘O’-Ring
4610.2	‘O’-Ring
4610.1	‘O’-Ring
4510.6	Gasket
4510.2	Gasket
4510.1	Gasket
4300.4	Bearing Isolator
4300.3	Bearing Isolator
4300.2	Bearing Isolator
4300.1	Bearing Isolator
4200	Mechanical Seal
6700.3	Key
6700.2	Key

8.10 HED-DS Antifriction Bearing + Slinger Lubrication + Inpro Seals + Water Cooling

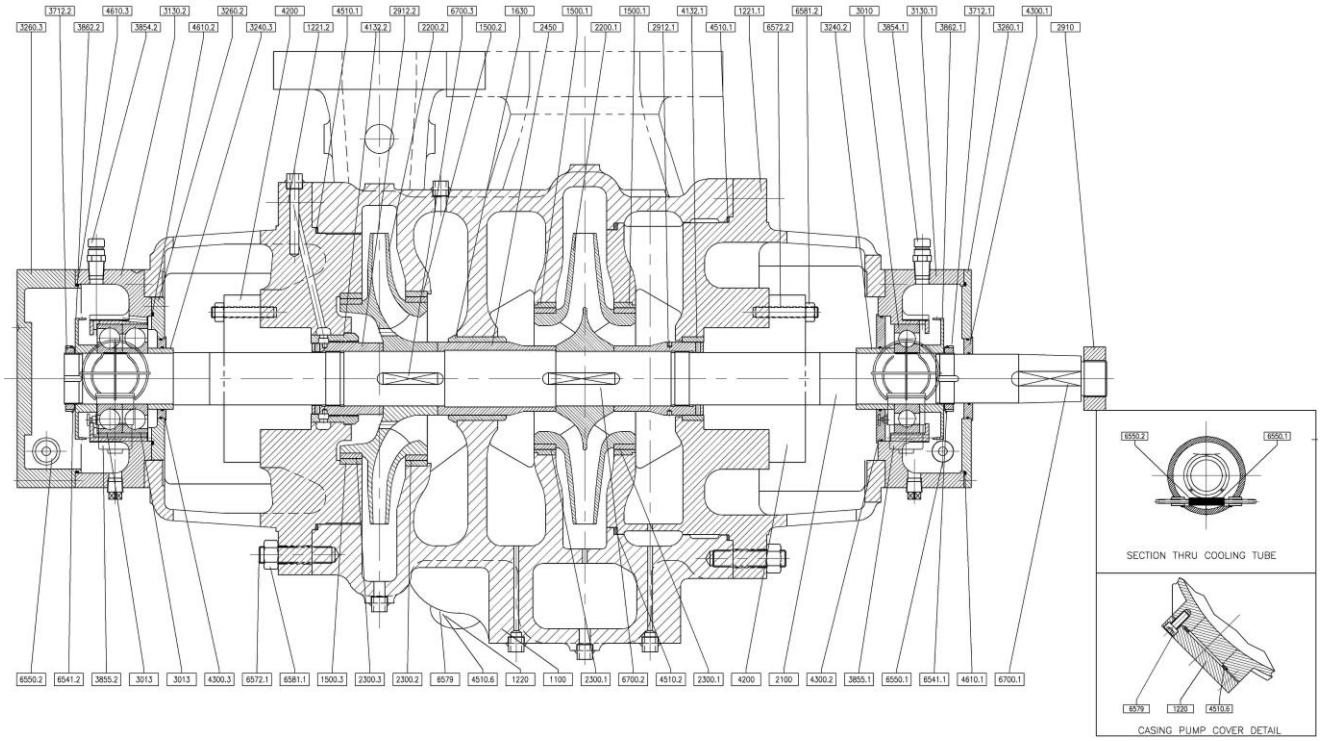

8.10.1 Parts list

Ref no	Description
3010	Anti-Friction Bearing
2912.2	Impeller Nut
2912.1	Impeller Nut
2910	Shaft Nut
2450	Shaft Sleeve
2300.3	Impeller Wear Ring
2300.2	Impeller Wear Ring
2300.1	Impeller Wear Ring
2200.2	Impeller
2200.1	Impeller
2100	Shaft
1630	Throttling Bush
1500.3	Casing Wear Ring
1500.2	Casing Wear Ring
1500.1	Casing Wear Ring
1221.2	Casing Cover
1221.1	Casing Cover
1220	Cover
1100	Casing
6700.3	Key

Ref no	Description
4200	Mechanical Seal
4132.2	Stuffing Box Bushing
4132.1	Stuffing Box Bushing
3862.2	Lubricating Disk Thrower
3862.1	Lubricating Disk Thrower
3855.2	Constant Level Oiler
3855.1	Constant Level Oiler
3854.2	Oil Filter Plug
3854.1	Oil Filter Plug
3712.2	Bearing Nut
3712.1	Bearing Nut
3260.3	Bearing Cover
3260.2	Bearing Cover
3260.1	Bearing Cover
3240.3	Intermediate Bearing Sleeve
3240.2	Intermediate Bearing Sleeve
3130.2	Bearing Bracket
3130.1	Bearing Bracket
3013	Thrust Ball Bearing
6700.2	Key

Ref no	Description
6700.1	Key
6581.2	Hexagon Nut
6581.1	Hexagon Nut
6579	Socket Head Cap Screw
6572.2	Stud
6572.1	Stud
6550.2	Cooling Device
6550.1	Cooling Device
6541.2	Lockwasher
6541.1	Lockwasher
4610.3	‘O’-Ring
4610.2	‘O’-Ring
4610.1	‘O’-Ring
4510.6	Gasket
4510.2	Gasket
4510.1	Gasket
4300.3	Bearing Isolator
4300.2	Bearing Isolator
4300.1	Bearing Isolator

8.11 HED Antifriction Bearing + Coke Crusher

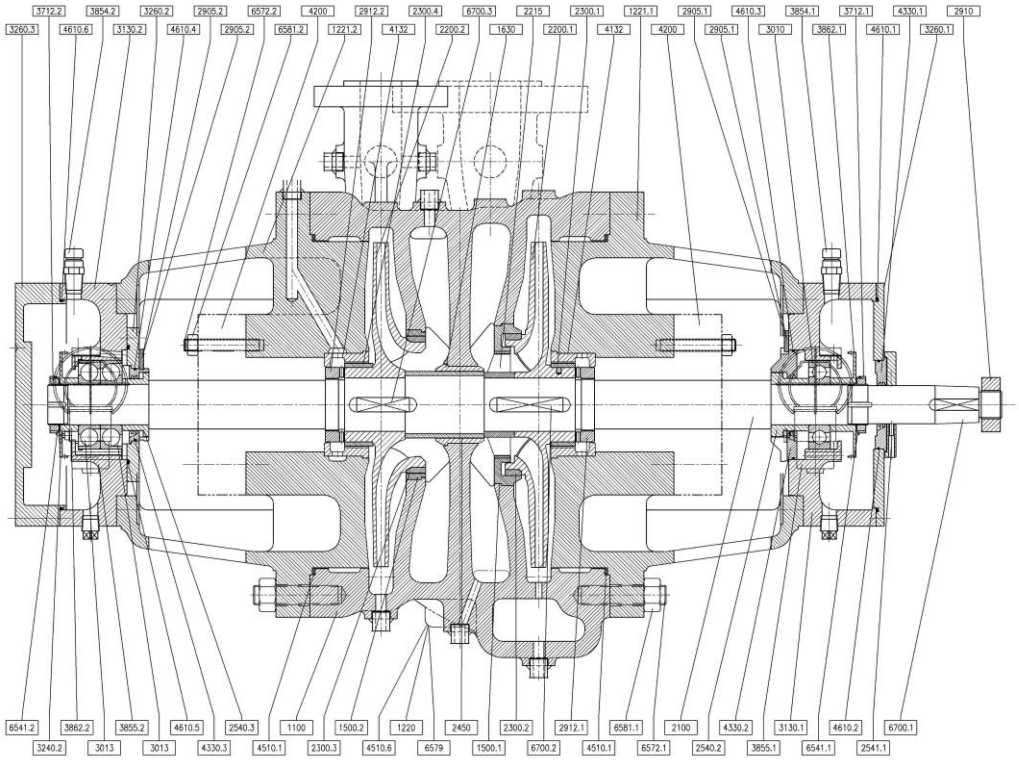

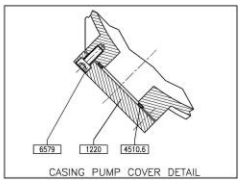

8.11.1 Parts list

Ref no	Description
2541.1	Deflector
2540.3	Deflector
2540.2	Deflector
2450	Shaft Sleeve
2300.4	Impeller Wear Ring
2300.3	Impeller Wear Ring
2300.2	Impeller Wear Ring
2300.1	Impeller Wear Ring
2215	Inducer
2200.2	Impeller
2200.1	Impeller
2100	Shaft
1630	Throttling Bush
1500.2	Casing Wear Ring
1500.1	Casing Wear Ring
1221.2	Casing Cover
1221.1	Casing Cover
1220	Cover
1100	Casing
6700.3	Key
6700.2	Key

Ref no	Description
3855.2	Constant Level Oiler
3855.1	Constant Level Oiler
3854.2	Oil Filter Plug
3854.1	Oil Filter Plug
3712.2	Bearing Nut
3712.1	Bearing Nut
3260.3	Bearing Cover
3260.2	Bearing Cover
3260.1	Bearing Cover
3240.2	Intermediate Bearing Sleeve
3130.2	Bearing Bracket
3130.1	Bearing Bracket
3013	Thrust Ball Bearing
3010	Anti-Friction Bearing
2912.2	Impeller Nut
2912.1	Impeller Nut
2910	Shaft Nut
2905.2	Washer
2905.1	Washer
6700.1	Key
6581.2	Hexagon Nut

Ref no	Description
6572.2	Stud
6572.1	Stud
6541.2	Lockwasher
6541.1	Lockwasher
4610.6	‘O’-Ring
4610.5	‘O’-Ring
4610.4	‘O’-Ring
4610.3	‘O’-Ring
4610.2	‘O’-Ring
4610.1	‘O’-Ring
4510.6	Gasket
4510.1	Gasket
4330.3	Labyrinth Ring
4330.2	Labyrinth Ring
4330.1	Labyrinth Ring
4200	Mechanical Seal
4132	Stuffing Box Bushing
3862.2	Lubricating Disk Thrower
3862.1	Lubricating Disk Thrower
6581.1	Hexagon Nut
6579	Socket Head Cap Screw

8.12 HED-DS Antifriction Bearing + Coke Crusher

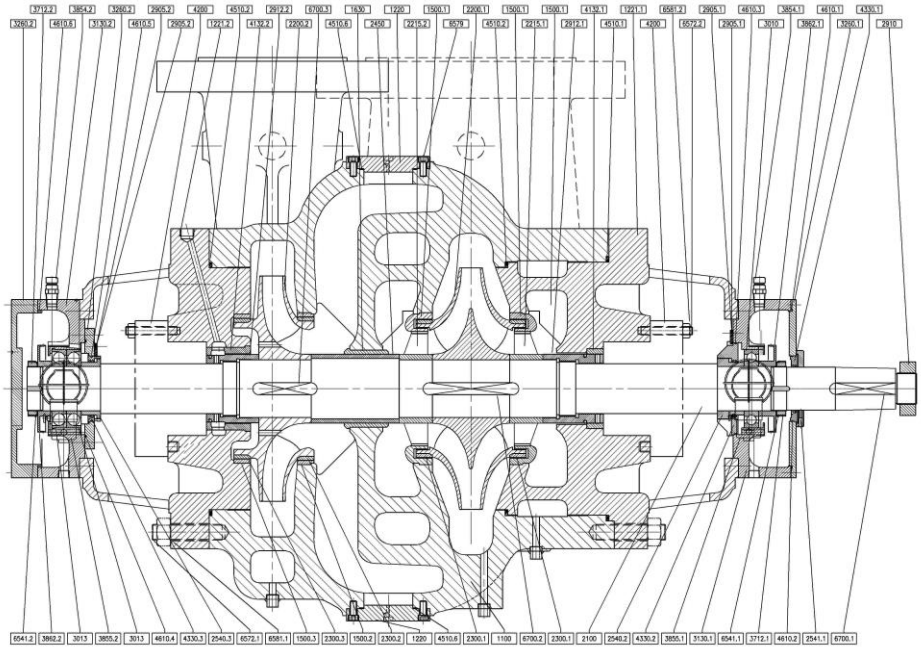

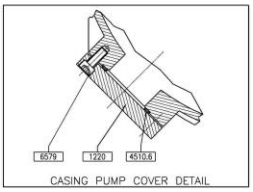

8.12.1 Parts list

Ref no	Description
2540.3	Deflector
2540.2	Deflector
2450	Shaft Sleeve
2300.3	Impeller Wear Ring
2300.2	Impeller Wear Ring
2300.1	Impeller Wear Ring
2215.2	Inducer
2215.1	Inducer
2200.2	Impeller
2200.1	Impeller
2100	Shaft
1630	Throttling Bush
1500.3	Casing Wear Ring
1500.2	Casing Wear Ring
1500.1	Casing Wear Ring
1221.2	Casing Cover
1221.1	Casing Cover
1220	Cover
1100	Casing
6700.3	Key
6700.2	Key
6572.2	Stud

Ref no	Description
3862.1	Lubricating Disk Thrower
3855.2	Constant Level Oiler
3855.1	Constant Level Oiler
3854.2	Oil Filter Plug
3854.1	Oil Filter Plug
3712.2	Bearing Nut
3712.1	Bearing Nut
3260.2	Bearing Cover
3260.1	Bearing Cover
3130.2	Bearing Bracket
3130.1	Bearing Bracket
3013	Thrust Ball Bearing
3010	Anti-Friction Bearing
2912.2	Impeller Nut
2912.1	Impeller Nut
2910	Shaft Nut
2905.2	Washer
2905.1	Washer
2541.1	Deflector
6700.1	Key
6581.2	Hexagon Nut

Ref no	Description
6572.1	Stud
6541.2	Lockwasher
6541.1	Lockwasher
4610.6	‘O’-Ring
4610.5	‘O’-Ring
4610.4	‘O’-Ring
4610.3	‘O’-Ring
4610.2	‘O’-Ring
4610.1	‘O’-Ring
4510.6	Gasket
4510.2	Gasket
4510.1	Gasket
4330.3	Labyrinth Ring
4330.2	Labyrinth Ring
4330.1	Labyrinth Ring
4200	Mechanical Seal
4132.2	Stuffing Box Bushing
4132.1	Stuffing Box Bushing
3862.2	Lubricating Disk Thrower
6581.1	Hexagon Nut
6579	Socket Head Cap Screw

8.13 HED-DS Sleeve Ball Bearing + Oil Ring Lubrication

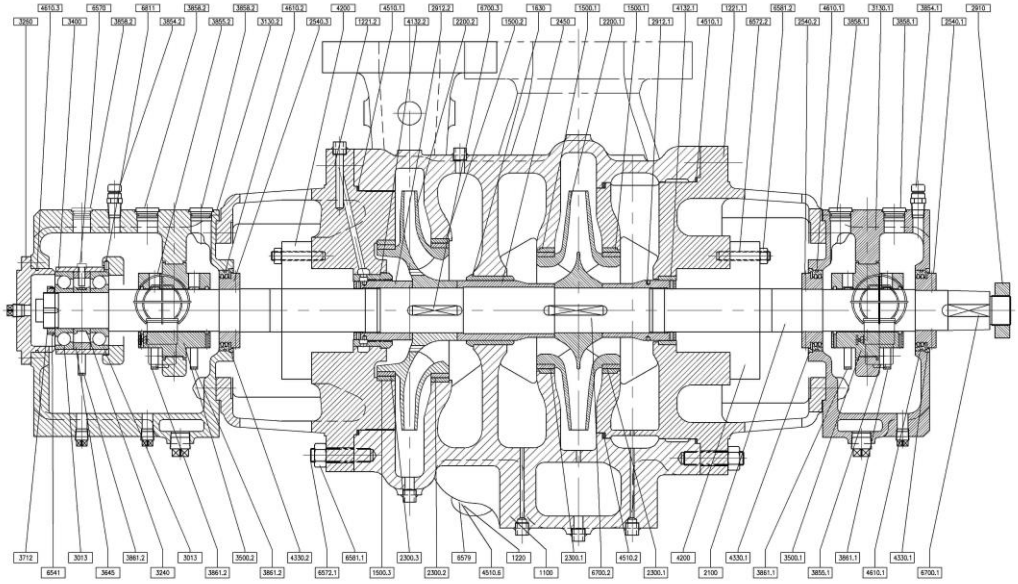

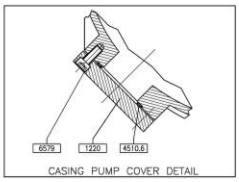

8.13.1 Parts list

Ref no	Description
2910	Shaft Nut
2540.3	Deflector
2540.2	Deflector
2540.1	Deflector
2450	Shaft Sleeve
2300.3	Impeller Wear Ring
2300.2	Impeller Wear Ring
2300.1	Impeller Wear Ring
2200.2	Impeller
2200.1	Impeller
2100	Shaft
1630	Throttling Bush
1500.3	Casing Wear Ring
1500.2	Casing Wear Ring
1500.1	Casing Wear Ring
1221.2	Casing Cover
1221.1	Casing Cover
1220	Cover
1100	Casing
6811	Cylindrical Pin
6700.3	Key

Ref no	Description
3861.1	Oil Ring
3858.2	Oil Level Sight Glass
3858.1	Oil Level Sight Glass
3855.2	Constant Level Oiler
3855.1	Constant Level Oiler
3854.2	Oil Filter Plug
3854.1	Oil Filter Plug
3712	Bearing Nut
3645	Disk Spacer
3500.2	Bearing Shell
3500.1	Bearing Shell
3400	Bearing Sleeve
3260	Bearing Cover
3240	Intermediate Bearing Sleeve
3130.2	Bearing Bracket
3130.1	Bearing Bracket
3013	Thrust Ball Bearing
2912.2	Impeller Nut
2912.1	Impeller Nut
6700.2	Key
6700.1	Key

Ref no	Description
6581.2	Hexagon Nut
6581.1	Hexagon Nut
6579	Socket head Cap Screw
6572.2	Stud
6572.1	Stud
6570	Screw
6541	Lockwasher
4610.3	‘O’-Ring
4610.2	‘O’-Ring
4610.1	‘O’-Ring
4510.6	Gasket
4510.2	Gasket
4510.1	Gasket
4330.2	Labyrinth Ring
4330.1	Labyrinth Ring
4200	Mechanical Seal
4132.2	Stuffing Box Bushing
4132.1	Stuffing Box Bushing
3861.2	Oil Ring

8.14 HED-DS Sleeve KTB Bearing + Forced Feed Lubrication

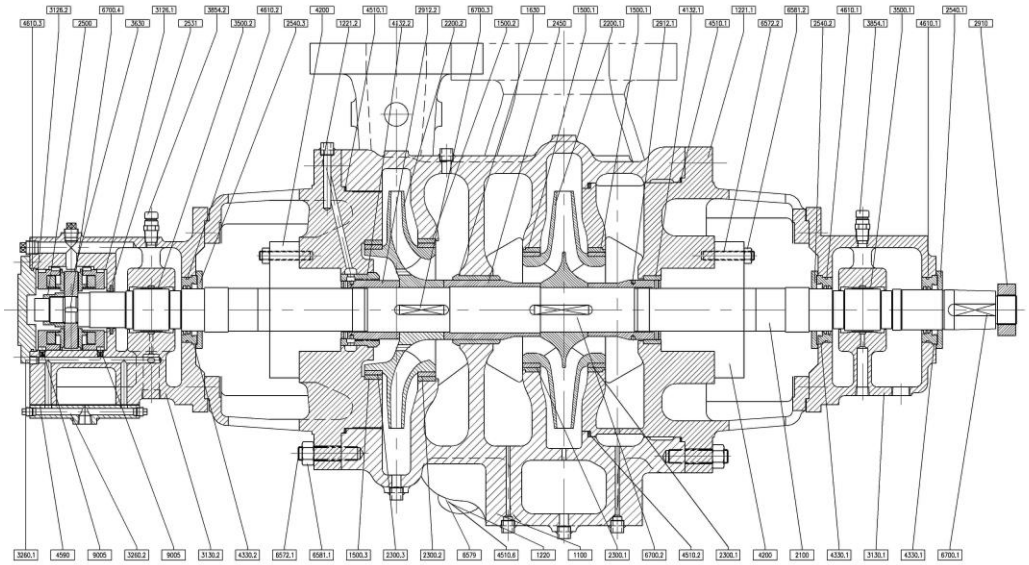

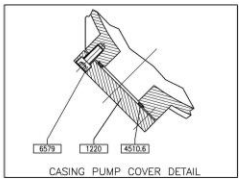

8.14.1 Parts list

Ref no	Description
2540.2	Deflector
2540.1	Deflector
2531	Split Retaining Ring
2500	Ring
2450	Shaft Sleeve
2300.3	Impeller Wear Ring
2300.2	Impeller Wear Ring
2300.1	Impeller Wear Ring
2200.2	Impeller
2200.1	Impeller
2100	Shaft
1630	Throttling Bush
1500.3	Casing Wear Ring
1500.2	Casing Wear Ring
1500.1	Casing Wear Ring
1221.2	Casing Cover
1221.1	Casing Cover
1220	Cover
1100	Casing

Ref no	Description
4330.1	Labyrinth Ring
4200	Mechanical Seal
4132.2	Stuffing Box Bushing
4132.1	Stuffing Box Bushing
3854.2	Oil Filter Plug
3854.1	Oil Filter Plug
3630	Thrust Bearing Pad
3500.2	Bearing Shell
3500.1	Bearing Shell
3260.2	Bearing Cover
3260.1	Bearing Cover
3130.2	Bearing Bracket
3130.1	Bearing Bracket
3126.2	Shim
3126.1	Shim
2912.2	Impeller Nut
2912.1	Impeller Nut
2910	Shaft Nut
2540.3	Deflector

Ref no	Description
9005	Orifice
6700.4	Key
6700.3	Key
6700.2	Key
6700.1	Key
6581.2	Hexagon Nut
6581.1	Hexagon Nut
6579	Socket Head Cap Screw
6572.2	Stud
6572.1	Stud
4610.3	‘O’-Ring
4610.2	‘O’-Ring
4610.1	‘O’-Ring
4590	Gasket
4510.6	Gasket
4510.2	Gasket
4510.1	Gasket
4330.2	Labyrinth Ring

8.15 HED-DS Antifriction Bearing + Purge Oil Mist

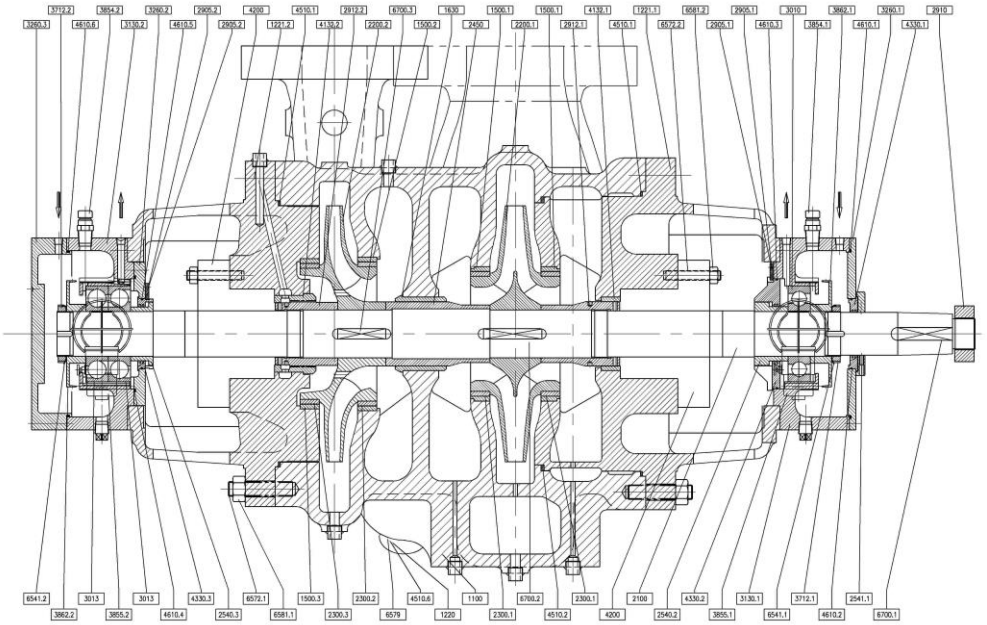

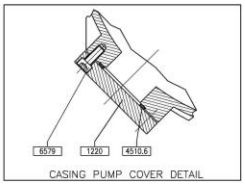

8.15.1 Parts list

Ref no	Description
2905.1	Washer
2541.1	Deflector
2540.3	Deflector
2540.2	Deflector
2450	Shaft Sleeve
2300.3	Impeller Wear Ring
2300.2	Impeller Wear Ring
2300.1	Impeller Wear Ring
2200.2	Impeller
2200.1	Impeller
2100	Shaft
1630	Throttling Bush
1500.3	Casing Wear Ring
1500.2	Casing Wear Ring
1500.1	Casing Wear Ring
1221.2	Casing Cover
1221.1	Casing Cover
1220	Cover
1100	Casing
6700.3	Key
6700.2	Key

Ref no	Description
3862.2	Lubricating Disk Thrower
3862.1	Lubricating Disk Thrower
3855.2	Constant Level Oiler
3855.1	Constant Level Oiler
3854.2	Oil Filter Plug
3854.1	Oil Filter Plug
3712.2	Bearing Nut
3712.1	Bearing Nut
3260.3	Bearing Cover
3260.2	Bearing Cover
3260.1	Bearing Cover
3130.2	Bearing Bracket
3130.1	Bearing Bracket
3013	Thrust Ball Bearing
3010	Anti Friction Bearing
2912.2	Impeller Nut
2912.1	Impeller Nut
2910	Shaft Nut
2905.2	Washer
6700.1	Key
6581.2	Hexagon Nut

Ref no	Description
6572.2	Stud
6572.1	Stud
6541.2	Lockwasher
6541.1	Lockwasher
4610.6	‘O’-Ring
4610.5	‘O’-Ring
4610.4	‘O’-Ring
4610.3	‘O’-Ring
4610.2	‘O’-Ring
4610.1	‘O’-Ring
4510.6	Gasket
4510.2	Gasket
4510.1	Gasket
4330.3	Labyrinth Ring
4330.2	Labyrinth Ring
4330.1	Labyrinth Ring
4200	Mechanical Seal
4132.2	Stuffing Box Bushing
4132.1	Stuffing Box Bushing
6581.1	Hexagon Nut
6579	Socket Head Screw

8.16 General arrangement drawing

The typical general arrangement drawing and any specific drawings required by the contract will be sent to the Purchaser separately unless the contract specifically calls for these to be included into the User Instructions. If required, copies of other drawings sent separately to the Purchaser should be obtained from the Purchaser and retained with these User Instructions

9 CERTIFICATION

Certificates determined from the Contract requirements are provided with these instructions where applicable. Examples are certificates for CE marking, ATEX marking etc. If required, copies of other certificates sent separately to the Purchaser should be obtained from the Purchaser for retention with these User Instructions.

10 OTHER RELEVANT DOCUMENTATION AND MANUALS

10.1 Supplementary User Instruction manuals

Supplementary instruction determined from the contract requirements for inclusion into User Instructions such as for a driver, instrumentation, controller, sub-driver, seals, sealant system, mounting component etc are included under this section. If further copies of these are required they should be obtained from the purchaser for retention with these User Instructions.

10.2 Change notes

If any changes, agreed with Flowserve, are made to the product after its supply, a record of the details should be maintained with these User Instructions.

10.3 Additional sources of information

Reference 1:
NPSH for Rotordynamic Pumps: a reference guide, Europump Guide No. 1, Europump & World Pumps, Elsevier Science, United Kingdom, 1999.

Reference 2:
Pumping Manual, 9th edition, T.C. Dickenson, Elsevier Advanced Technology, United Kingdom, 1995.

Reference 3:
Pump Handbook, 2nd edition, Igor J. Karassik et al, McGraw-Hill Inc., New York, 1993.

Reference 4:
ANSI/HI 1.1-1.5
Centrifugal Pumps - Nomenclature, Definitions, Application and Operation.

Reference 5:
ANSI B 31 3- Process Piping.

NOTES:

Your Flowserve factory contacts:

Service & Warranty:
Flowserve Flow Solutions Group - Italy
Worthington S.r.l.
Via Rossini, 90/92
20033 Desio (MB) - Italy
Telephone (24 hours) +39 0362 6121
Fax +39 0362 628882
+39 0362 620750

Spare Parts & Repair :
Flowserve Flow Solutions Group - Italy
Worthington S.r.l.
S.S. Sannitica, 87 – Km 19
81025 Marcianise (CE) - Italy
Telephone (24 hours) +39 0823 634111
Fax +39 0823 821747
+39 0823 634218

Local Flowserve factory representatives:

To find your local Flowserve representative please use the Sales Support Locator System found at www.flowserve.com

FLOWSERVE REGIONAL SALES OFFICES:

USA and Canada
Flowserve Corporation
5215 North O'Connor Blvd.,
Suite 2300
Irving, Texas 75039-5421 USA
Telephone 1 972 443 6500
Fax 1 972 443 6800

Europe, Middle East, Africa
Worthing S.P.A.
Flowserve Corporation
Via Rossini 90/92
20033 Desio (Milan) Italy
Telephone 39 0362 6121
Fax 39 0362 303396

Latin America and Caribbean
Flowserve Corporation
6840 Wynnwood Lane
Houston, Texas 77008 USA
Telephone 1 713 803 4434
Fax 1 713 803 4497

Asia Pacific
Flowserve Pte. Ltd
10 Tuas Loop
Singapore 637345
Telephone +65 6771 0600
Fax +65 6779 4607