TECHNICAL BULLETIN

Valtek®
NR Diaphragm Rotary Actuator

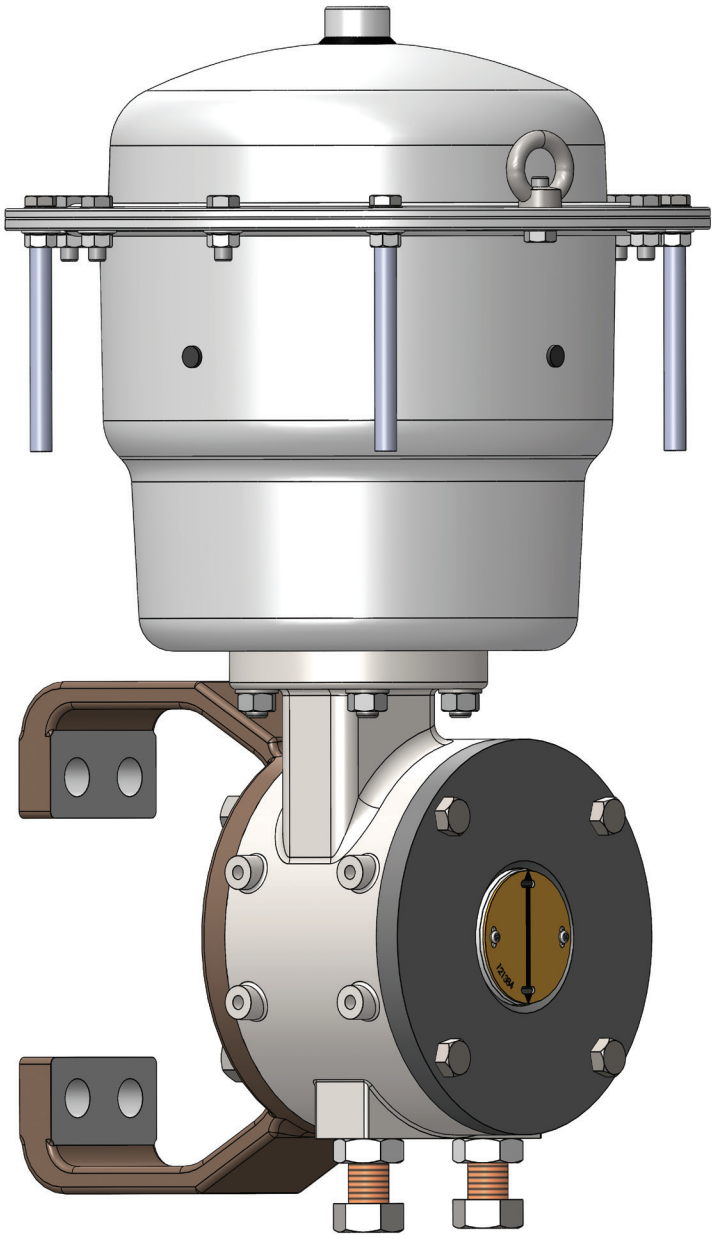

Experience In Motion

NR Diaphragm Rotary Actuator

The NR Diaphragm rotary actuators has a flexible diaphragm, placed between two casings. The upper diaphragm case is designed as pressure tight. The lower diaphragm case holds a spring opposing the force generated within the pressure chamber of actuator. The controlled air supply is connected to the upper diaphragm case, and an increase or decrease of the air pressure results in a rotation and positioning of valve stem. This kind of actuator is called single acting with spring return positioning force converted by a lever from a linear motion to a rotary motion. The rotation angle is limited to 60 or 90-degrees options. The lever is installed and guided in a case, called transfer case. The transfer case is designed so that the actuator can be mounted in two positions, thus allowing two fail safe positions, fail close or fail open. Simplicity of design reduces maintenance and parts inventory costs. It is ideally suited for flow and pressure control of liquid and gas media in oil and gas, power, chemical and petrochemical processing, and related industries. The Valtek® NR Actuator is manufactured according to ISO 9001 standards.

The NR Diaphragm rotary actuator are designed for supply pressures up to 80 psi (5.52 bar). The actuator uses a rocking piston for direct conversion of linear motion to rotary motion. The rocking piston assembly combined with a splined shaft and lever eliminates lost motion.

These characteristics are designed into a lightweight, rugged and compact assembly, making the NR Diaphragm rotary actuator the foremost choice for quarter-turn applications. The NR Diaphragm rotary actuator is designed to operate the Valdisk high-performance butterfly valve, the ShearStream V-notch ball valve, MaxFlo 4 eccentric rotary plug valve or other applications requiring precise rotary motion. Valtek pneumatic and electro-pneumatic positioners are available for throttling application.

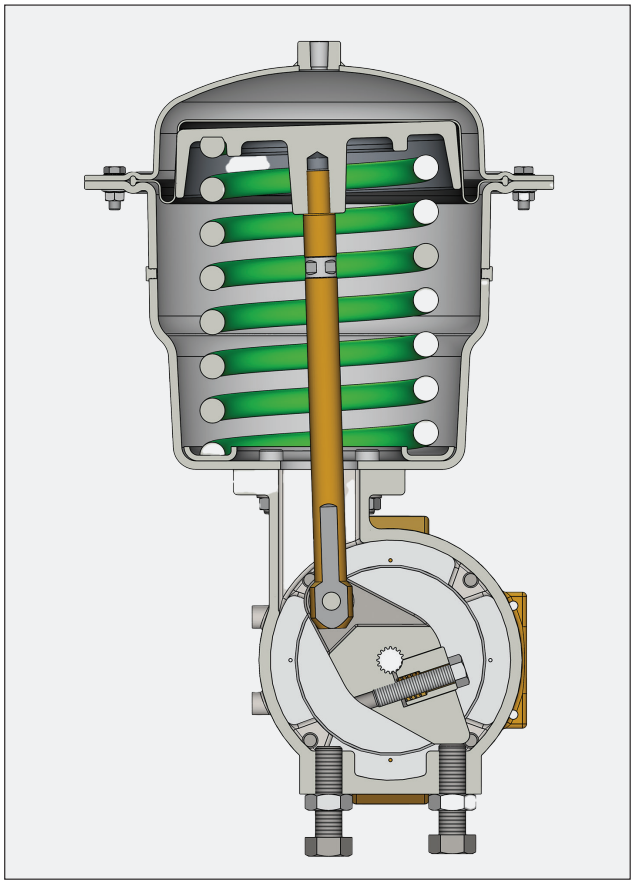

Figure 1: Valtek® NR - Actuator

Features and Advantages

The NR Diaphragm rotary actuator features high torques, positioning stiffness and easy maintenance to produce a high-performance rotary actuator that excels in throttling control and on/off applications.

Features	Advantages
Accepts up to 80 psi (5.52 bar) air supply pressure	• Provides exceptional cycle life with minimal wear, combined with direct linkage for very low hysteresis.
Rocking diaphragm plate	• Provides direct connection to shaft. - Assures zero lost motion between actuator and valve. - Utilizes fewer parts.
Splined shaft and lever with clamped design	• Allows zero lost motion resulting in low dead band and hysteresis.
Compact, lightweight, rugged	• Permits easy maintenance. - Installs in limited space applications. - Lower weight assists in meeting seismic requirements.
Low-friction bearings	• Provides millions of cycles with minimal wear combined with direct linkage, provides very low hysteresis.
Field-reversible	• Requires no extra parts to permit fast, easy field reversing air action. • Requires only changing orientation with respect to valve.
Fail-safe spring	• Moves actuator to failure position without pressure assistance.
Air-purged, self-draining, fully enclosed transfer case	• Prevents corrosion of linkages, ensures safe operation, contains external position indicator, allows four mounting positions without retubing, changing or adding parts.
Stroke stops	• Valve stroke is limited in actuator and instead of the valve. • Stroke stops allow both ends of stroke to be adjusted and absorbing the excessive torque from actuator preventing shaft failure.
Handwheel	• Add on declutchable handwheel option is available for manual operation.
Rotation angle conversion	• Few parts are needed to convert 60° to 90°or 90° to 60° vice versa.
Low ambient temperature	• Suitable for cold climate regions with ambient temperature down to -55°C (-67°F)

Specifications

Table 1: Actuator Specifications

Type	Single-acting, Diaphragm spring return
Sizes	25, 50, 100
Action	Air to open, Air to close, Fail in place
Max Supply Pressure	NR 25, 50: 5.52 bar (80 psi) NR 100: 5.00 bar (73 psi)
Auxiliary	Declutchable handwheel
Stroke	90° and 60°
Standard Temperature Range	-30°C to +70°C (-22°F to +158°F)
Low Temperature Range	-55°C to +70°C (-67°F to +158°F)

Table 2: Rotary Actuator data

For 90 deg, Valdisk / ShearStream / MaxFlo

Actuator Size	Stroke		Max Air Supply		Spring Range	Upper Diaphragm Area	
	in	cm	psi	bar	bar	in²	cm²
Size 25	1.88	4.8	80	5.52	0.2 – 1.0	23.25	150
					0.7 – 1.7		
					1.5 – 2.3		
Size 50	3.25	8.3			0.2 – 1.0	54.25	350
					0.8 – 1.7		
					1.3 – 2.5		
Size 100	4.00	10.2	73	5.00	0.3 – 1.0	116.25	750
					0.9 – 1.9		
					1.4 – 2.4		

For 60 deg, MaxFlo

Actuator Size	Stroke		Max Air Supply		Spring Range	Upper Diaphragm Area	
	in	cm	psi	bar	bar	in²	cm²
Size 25	1.33	3.4	80	5.52	0.4 – 1.0	23.25	150
					1.0 – 1.7		
					2.0 – 2.6		
Size 50	2.30	5.8			0.5 – 1.1	54.25	350
					1.2 – 1.8		
					1.8 – 2.6		
Size 100	2.83	7.2	73	5.00	0.4 – 0.9	116.25	750
					1.0 – 1.7		
					2.3 – 3.4		

Specifications, cont'd.

Table 3: Torque data

For 90 deg, Valdisk / ShearStream / MaxFlo

Spring to close torque: (Fail close)

TORQUE VALUES								
Actuator Size	NR-25		Actuator Size	NR-50		Actuator Size	NR-100	
Spring range (bar)	in-lbf	Nm	Spring range (bar)	in-lbf	Nm	Spring range (bar)	in-lbf	Nm
0.2-1.0	60	7	**0.2-1.0**	232	26	**0.3-1.0**	797	90
0.7-1.7	204	23	**0.8-1.7**	957	108	**0.9-1.9**	2715	307
1.5-2.3	427	48	**1.3-2.5**	1495	169	**1.4-2.4**	4207	475

Net Torque to open: (Fail close) @ 60 psi [4.14 bar]

TORQUE VALUES								
Actuator Size	NR-25		Actuator Size	NR-50		Actuator Size	NR-100	
Spring range (bar)	in-lbf	Nm	Spring range (bar)	in-lbf	Nm	Spring range (bar)	in-lbf	Nm
0.2-1.0	1118	126	**0.2-1.0**	4607	521	**0.3-1.0**	11832	1337
0.7-1.7	975	110	**0.8-1.7**	3882	439	**0.9-1.9**	9914	1120
1.5-2.3	751	85	**1.3-2.5**	3343	378	**1.4-2.4**	8422	952

Spring to open torque: (Fail open)

TORQUE VALUES								
Actuator Size	NR-25		Actuator Size	NR-50		Actuator Size	NR-100	
Spring range (bar)	in-lbf	Nm	Spring range (bar)	in-lbf	Nm	Spring range (bar)	in-lbf	Nm
0.2-1.0	296	33	**0.2-1.0**	1243	140	**0.3-1.0**	3343	378
0.7-1.7	516	58	**0.8-1.7**	2119	239	**0.9-1.9**	6059	685
1.5-2.3	695	78	**1.3-2.5**	3069	347	**1.4-2.4**	7681	868

Net Torque to close: (Fail open) @ 60 psi [4.14 bar]

TORQUE VALUES								
Actuator Size	NR-25		Actuator Size	NR-50		Actuator Size	NR-100	
Spring range (bar)	in-lbf	Nm	Spring range (bar)	in-lbf	Nm	Spring range (bar)	in-lbf	Nm
0.2-1.0	885	100	**0.2-1.0**	3593	406	**0.3-1.0**	9284	1049
0.7-1.7	664	75	**0.8-1.7**	2717	307	**0.9-1.9**	6567	742
1.5-2.3	487	55	**1.3-2.5**	1770	200	**1.4-2.4**	4948	559

Specifications, cont'd.

Table 3: Torque data, cont'd.

For 60 deg, MaxFlo

Spring to close torque: (Fail close)

TORQUE VALUES								
Actuator Size	NR-25		Actuator Size	NR-50		Actuator Size	NR-100	
Spring range (bar)	in-lbf	Nm	Spring range (bar)	in-lbf	Nm	Spring range (bar)	in-lbf	Nm
0.4-1.0	158	18	**0.5-1.1**	642	72	**0.4-0.9**	1881	212
1.0-1.7	362	41	**1.2-1.8**	1594	180	**1.0-1.7**	4539	513
2.0-2.6	706	80	**1.8-2.6**	2407	272	**2.3-3.4**	8742	988

Net Torque to open: (Fail close) @ 60 psi [4.14 bar]

TORQUE VALUES								
Actuator Size	NR-25		Actuator Size	NR-50		Actuator Size	NR-100	
Spring range (bar)	in-lbf	Nm	Spring range (bar)	in-lbf	Nm	Spring range (bar)	in-lbf	Nm
0.4-1.0	1318	149	**0.5-1.1**	5456	616	**0.4-0.9**	14009	1582
1.0-1.7	1114	126	**1.2-1.8**	4503	509	**1.0-1.7**	11351	1282
2.0-2.6	770	87	**1.8-2.6**	3691	417	**2.3-3.4**	7148	808

Spring to open torque: (Fail open)

TORQUE VALUES								
Actuator Size	NR-25		Actuator Size	NR-50		Actuator Size	NR-100	
Spring range (bar)	in-lbf	Nm	Spring range (bar)	in-lbf	Nm	Spring range (bar)	in-lbf	Nm
0.4-1.0	355	40	**0.5-1.1**	1481	167	**0.4-0.9**	3990	451
1.0-1.7	618	70	**1.2-1.8**	2526	285	**1.0-1.7**	7233	817
2.0-2.6	909	103	**1.8-2.6**	3658	413	**2.3-3.4**	13103	1480

Net Torque to close: (Fail open) @ 60 psi [4.14 bar]

TORQUE VALUES								
Actuator Size	NR-25		Actuator Size	NR-50		Actuator Size	NR-100	
Spring range (bar)	in-lbf	Nm	Spring range (bar)	in-lbf	Nm	Spring range (bar)	in-lbf	Nm
0.4-1.0	1121	127	**0.5-1.1**	4616	521	**0.4-0.9**	11899	1344
1.0-1.7	857	97	**1.2-1.8**	3572	404	**1.0-1.7**	8656	978
2.0-2.6	567	64	**1.8-2.6**	2440	276	**2.3-3.4**	2787	315

Specifications, cont'd.

Table 4: Valve Actuator compatibility

Valdisk3 (CL 150 / 600)				ShearStream (CL 150 / 600)				MaxFlo 4/3 (CL 150 / 600)			
Valve Size	Actuator Size			Valve Size	Actuator Size			Valve Size	Actuator Size		
	NR 25	NR 50	NR 100		NR 25	NR 50	NR 100		NR 25	NR 50	NR 100
2"	X	-	-	**1"**	X	-	-	**1"**	X	-	-
3"	X	-	-	**1.5"**	X	-	-	**1.5"**	X	-	-
4"	X	X	-	**2"**	X	-	-	**2"**	X	-	-
6"	-	X	X	**3"**	X	X	-	**3"**	X	X	-
8"	-	X	X	**4"**	X	X	-	**4"**	X	X	-
10"	-	-	X	**6"**	-	X	X	**6"**	-	X	X
12"	-	-	X	**8"**	-	X	X	**8"**	-	X	X
14"	-	-	X	**10"**	-	-	X	**10"**	-	-	X
16"	-	-	X	**12"**	-	-	X	**12"**	-	-	X

Table 5: Actuator weight

Actuator Size		Size 25	Size 50	Size 100
Actuator	kg	18	39	86
	lbs	40	86	190
Actuator + HW	kg	22	53	98
	lbs	49	117	216

Certifications:

SIL-3

ATEX (Self Declaration)

Specifications, cont'd.

Table 6: Material of Construction

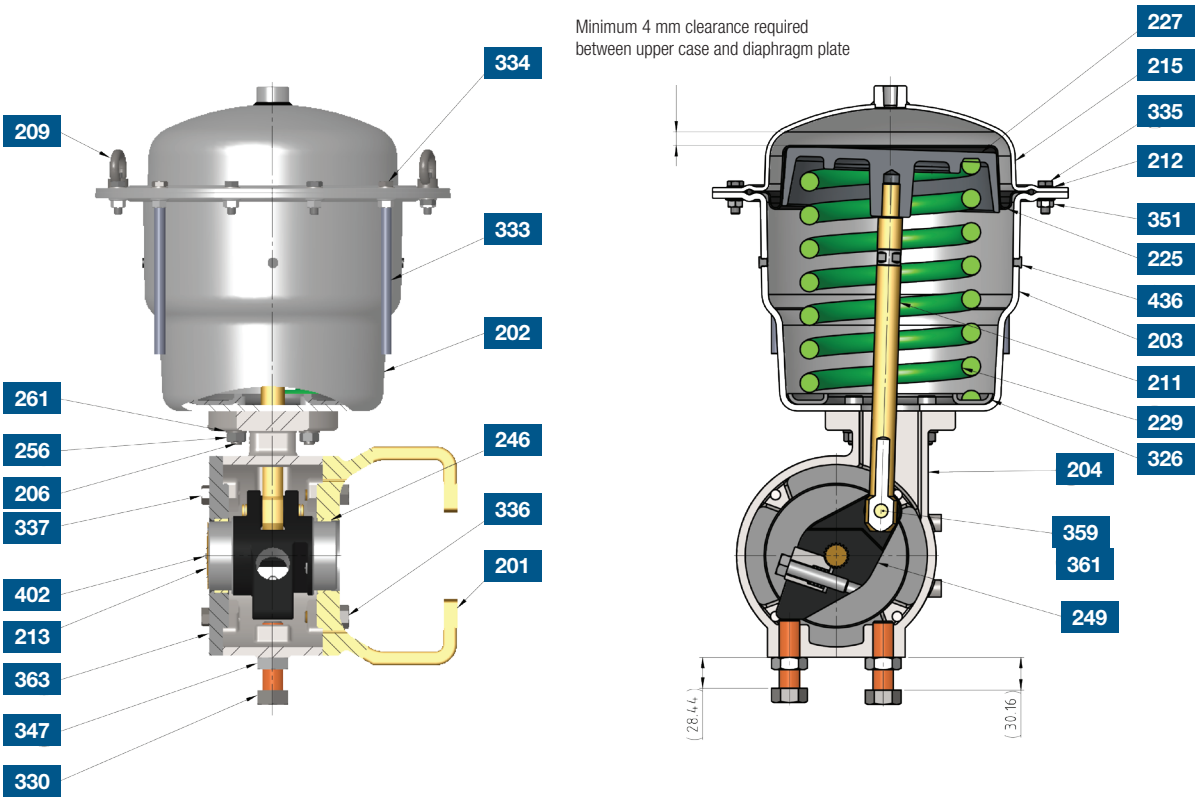

Figure 2: Final assembly drawing

Pos No.	Description	Material of construction
201	YOKE	DUCTILE IRON
203	ASSY, DIAPHRAGM CASE, LOWER	CARBON STEEL
204	TRANSFER CASE	CARBON STEEL
206	STUD	STAINLESS STEEL
209	RING NUT	STAINLESS STEEL
211	ACTUATOR STEM	STAINLESS STEEL
212	WASHER	STAINLESS STEEL
213	IND. PLATE	STAINLESS STEEL
215	ASSY, DIAPHRAGM CASE, UPPER	CARBON STEEL
225	DIAPHRAGM (STANDARD TEMPERATURE RANGE)	NBR ELASTOMER
225	DIDPHRAGM (LOW TEMPERATURERANGE)	SILICONE
227	DIAPHRAGM PLATE	ALUMINUM
229	SPRING, COMPRESSION	ALLOY STEEL
246	BEARING	FILAMENT-WOUND FIBERGLASS WITH PTFE LINER
249	ASSY, SPLINED LEVER	DUCTILE IRON
256	NUT	STAINLESS STEEL

Pos No.	Description	Material of construction
261	WASHER	STAINLESS STEEL
326	SPRING PLATE	CARBON STEEL
330	HEX HEAD BOLT	CARBON STEEL
333	PIPE	PLASTIC
334	HEX HEAD BOLT	STAINLESS STEEL
335	HEX HEAD BOLT	STAINLESS STEEL
336	BOLT	CARBON STEEL
337	HEX HEAD BOLT	STAINLESS STEEL
347	JAM NUT	MILD STEEL
351	NUT	STAINLESS STEEL
359	RET RING	STEEL
361	PIN	17-4 PH SS
363	COVER PLATE	CARBON STEEL
402	SCREW	STAINLESS STEEL
436	PLUG	RUBBER

Specifications, cont'd.

Table 6: Material of Construction, cont'd.

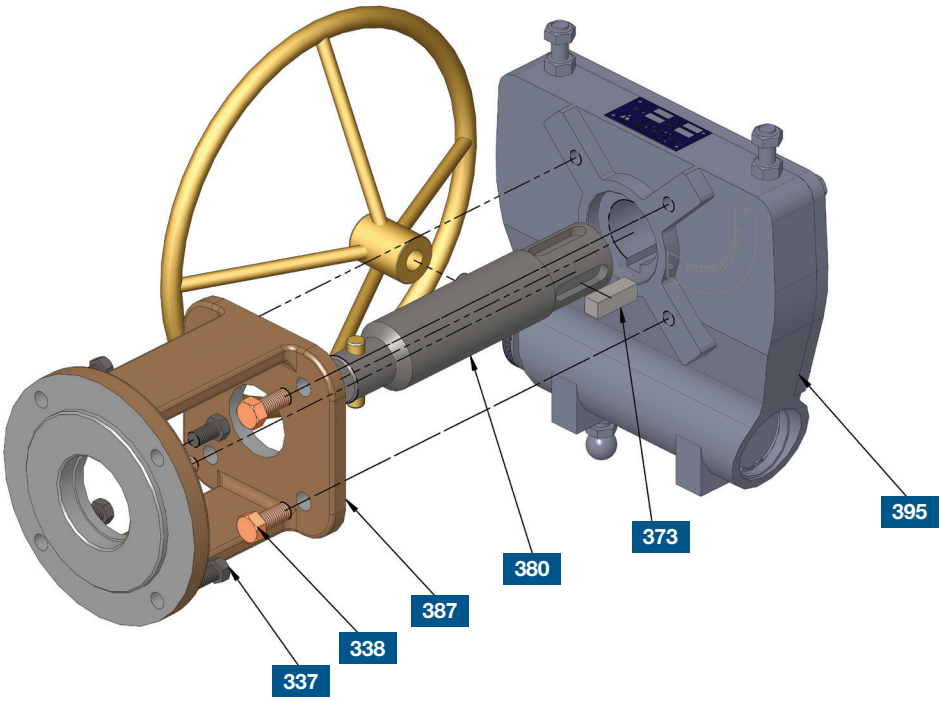

Figure 3: Declutchable handwheel assembly drawing

Optional declutchable handwheel

Pos No.	Description	Material of construction
337	BOLT	CARBON STEEL
338	BOLT	CARBON STEEL
373	KEY	CARBON STEEL
380	ASSY, SHAFT, HANDWHEEL	STAINLESS STEEL
387	YOKE	DUCTILE IRON
395	ACTUATOR, AMEYA, HANDWHEEL	CAST IRON

Ordering information

When ordering individual rotary actuators, the following information must be provided:

1. Operating conditions.
2. Maximum and minimum air supply pressure.
3. Valve rotation (60° or 90°) in degrees.
4. Actuator torque (Break to Open, Break to Close, Dynamic) required at both ends of rotation.
5. Fail position.
6. Stroking time requirements, if critical.
7. Pneumatic connection size.

Dimensions

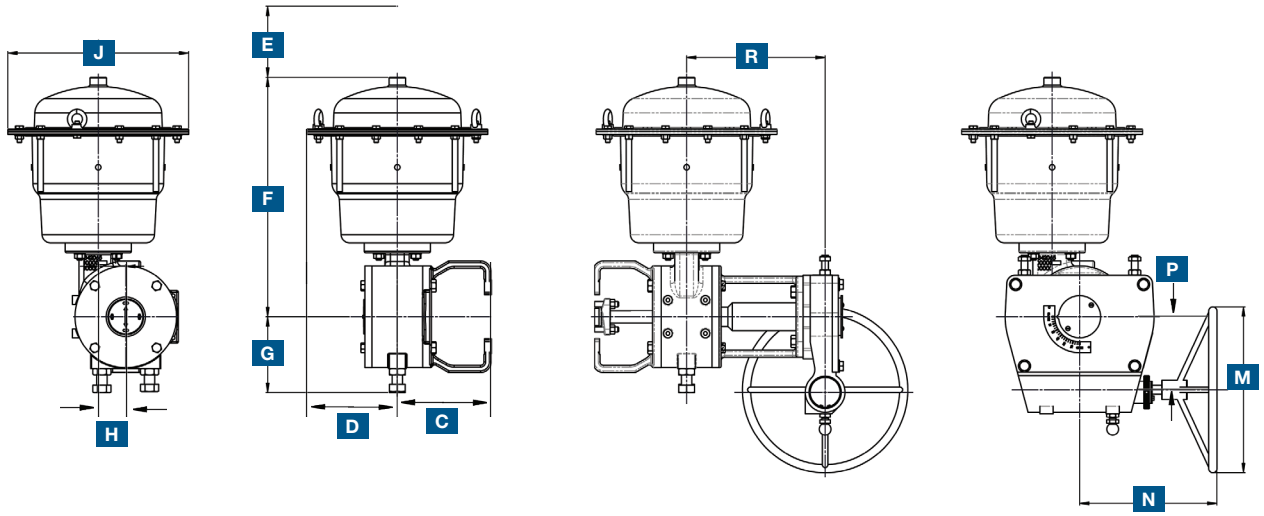

Table 7: Rotary Actuator Dimensions*

Size	C**		D		E		F		G		H		J		M		N		P		R		Pressure connection***
	in	mm	in	mm	in	mm	in	mm	in	mm	in	mm	in	mm	in	mm	in	mm	in	mm	in	mm	
25	8.0	203	4.6	116	6.0	152	12.1	308	4.6	116	1.1	29	Ø9.1	Ø232	Ø9.8	Ø250	9.1	230	2.9	74	7.4	188	1/4" NPT
50	8.5	216	6.5	164	8.0	203	17.1	433	5.4	137	2.0	50	Ø12.9	Ø328	Ø11.8	Ø300	9.8	249	5.2	132	9.9	251	1/4" NPT
100	8.8	224	8.5	217	11.0	279	21.7	552	7.4	187	2.4	61	Ø17	Ø434	Ø17.7	Ø450	13.1	333	5.9	150	9.4	239	1/4" NPT

* All dimensions are to be used for estimation only. Certified drawings will be supplied upon request.

** Dimension shall vary based on the valve model and size.

*** Pressure connection shall be changed based on requirement. (i.e., 3/8 " NPT, ½ "NPT, ¾" NPT)

Table 8: Pipe mounting orientation codes, MaxFlo

3 - Air action		4 - Pipe configuration		5 - Actuator orientation		6 - Shaft direction	
O	Air-to-open - ATO	**L**	Left hand mounting	**T**	Top (default)	**D**	Shaft downstream (default)
C	Air-to-close - ATC	**R**	Right hand mounting	**R**	Right	**U**	Shaft upstream
				L	Left		

AT				
	3	4	5	6

Mounting Orientations

Valve orientations, For Maxflo:

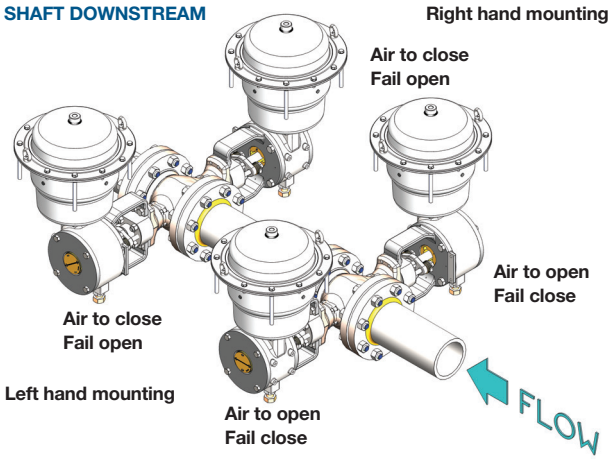

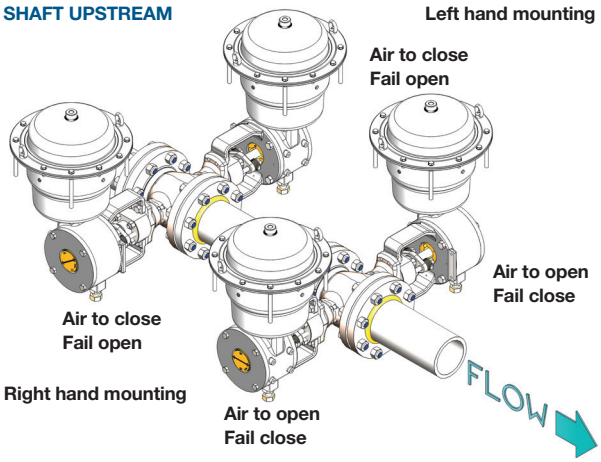

Note: Valve orientations not applicable for vertical pipe.

Actuator orientations

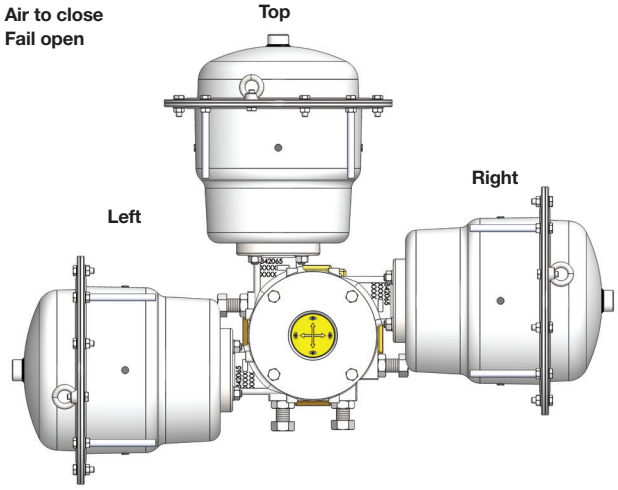

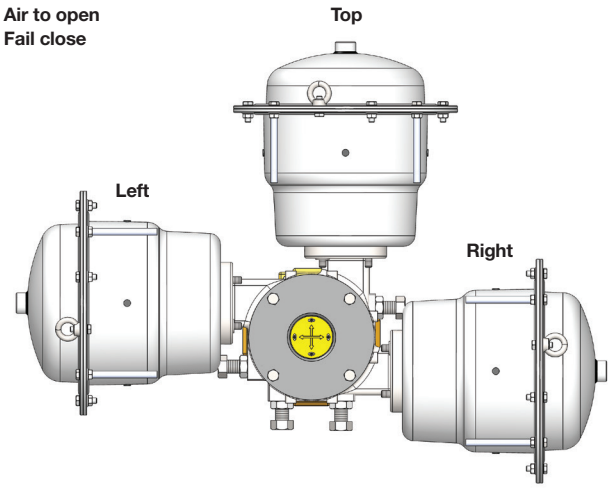

Handwheel orientations

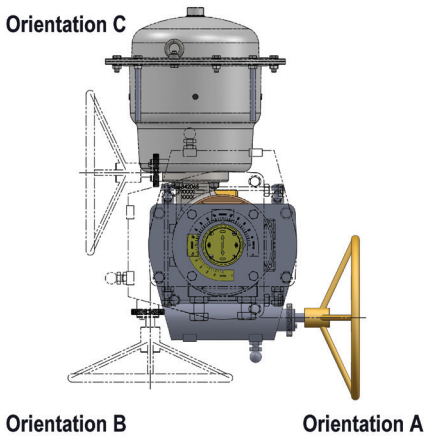

Mounting Orientations, cont'd.

Valve orientations, For ShearStream / Valdisk3

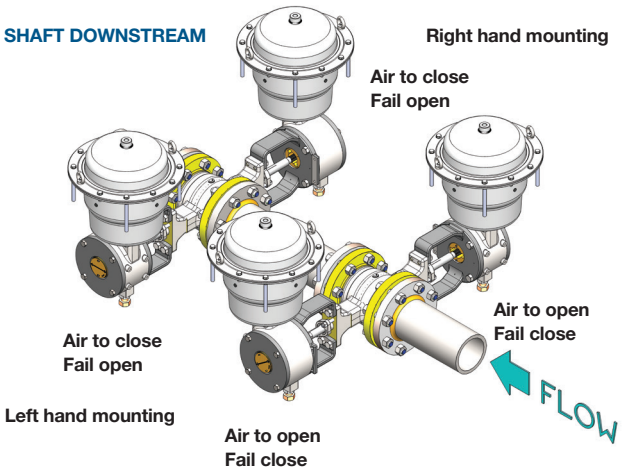

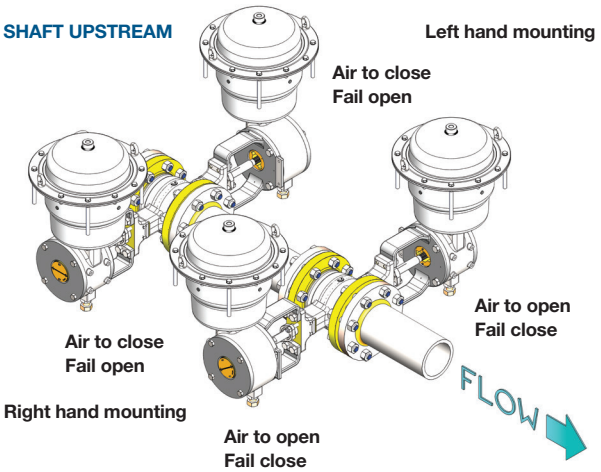

Note: Valve orientations not applicable for vertical pipe.

Actuator orientations

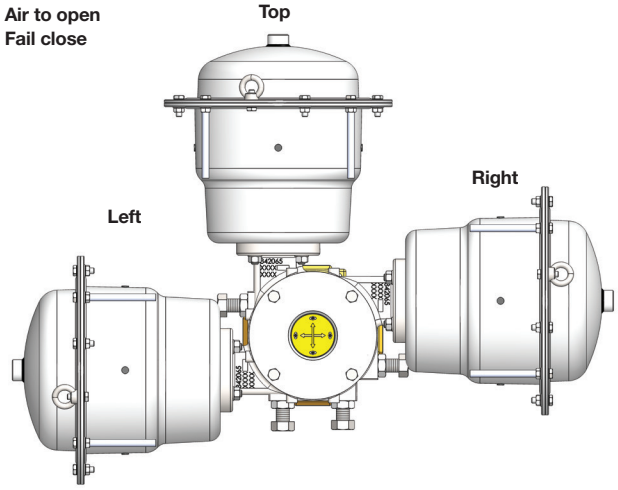

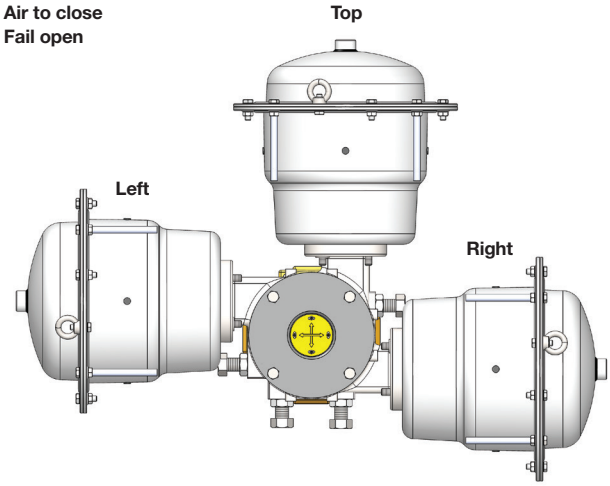

Handwheel orientations

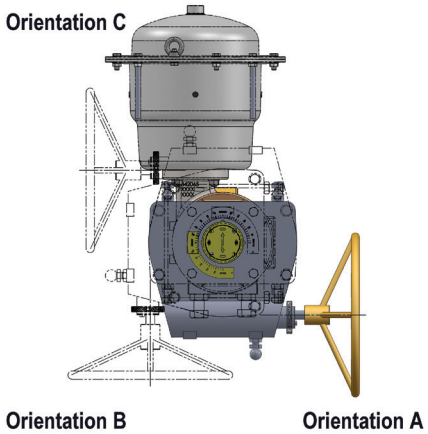

Flowserve Corporation
5215 North O'Connor Blvd.
Suite 700
Irving, Texas 75039-5421 USA

AITB001477-02 (EN/A4) July 2026

Flowserve Corporation has established industry leadership in the design and manufacture of its products. When properly selected, this Flowserve product is designed to perform its intended function safely during its useful life. However, the purchaser or user of Flowserve products should be aware that Flowserve products might be used in numerous applications under a wide variety of industrial service conditions. Although Flowserve can provide general guidelines, it cannot provide specific data and warnings for all possible applications. The purchaser/user must therefore assume the ultimate responsibility for the proper sizing and selection, installation, operation, and maintenance of Flowserve products. The purchaser/user should read and understand the Installation Instructions included with the product, and train its employees and contractors in the safe use of Flowserve products in connection with the specific application.

While the information and specifications contained in this literature are believed to be accurate, they are supplied for informative purposes only and should not be considered certified or as a guarantee of satisfactory results by reliance thereon. Nothing contained herein is to be construed as a warranty or guarantee, express or implied, regarding any matter with respect to this product. Because Flowserve is continually improving and upgrading its product design, the specifications, dimensions and information contained herein are subject to change without notice. Should any question arise concerning these provisions, the purchaser/user should contact Flowserve Corporation at any one of its worldwide operations or offices.

©2026 Flowserve Corporation. All rights reserved. This document contains registered and unregistered trademarks of Flowserve Corporation. Other company, product, or service names may be trademarks or service marks of their respective companies.