USER INSTRUCTIONS

Limitorque® Actuation Systems L120 Series

For L120-10 through L120-40

FCD LMENIM1201-05-A4 – 03/18

Installation
Operation
Maintenance

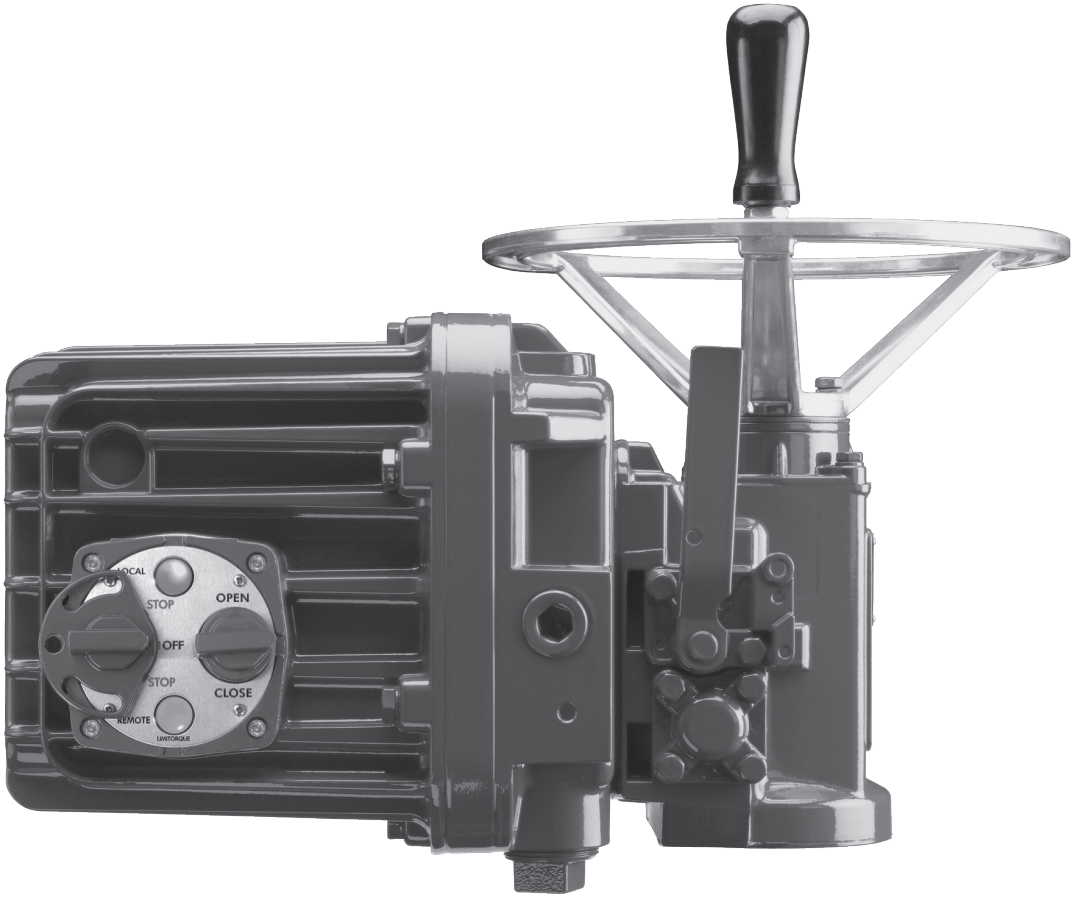

Experience In Motion

Contents

1	**Introduction**	**4**
1.1	Purpose	4
1.2	User Safety	4
2	**Product Inspection - Storage - Identification**	**5**
2.1	Inspection and Recording	5
2.2	Short-Term Storage (less than 1 year)	5
2.3	Product Identification	7
3	**Actuator Weights**	**8**
4	**Installation Instructions**	**9**
4.1	Safety Precautions	9
4.2	Safety Practices	10
4.3	Initial Actuator Preparation	10
4.3.1	Mounting Base	10
4.3.2	Stem Acceptance	10
4.4	Torque Switch	11
4.4.1	Setting Torque Switch	11
4.4.2	Balancing Torque Switch	12
4.5	Geared Limit Switch	12
4.5.1	Setting Limit Switch	12
4.5.2	Setting Procedure (Refer to Figure 4.2)	13
4.5.3	Combination of Contacts (Refer to Figure 4.2)	14
4.6	Position Indication	14
4.6.1	Local position indication	14
4.6.2	Remote Position Indication	15
4.7	Optional Side-Mounted Handwheel	16
5	**Operation**	**19**
5.1	Electrical Start-up	19

	5.2	Manual Operation	20
	5.3	Motor Operation	25
	5.4	Torque and Travel Limiting	25
6	**Maintenance**		**26**
	6.1	Lubrication	26
		6.1.1 Lubrication Inspection	26
		6.1.2 Factory Lubricant	27
	6.2	Minimum Lubricant Qualities Required	27
	6.3	Disassembly and Reassembly	28
	6.4	Disassembly of the L120-10, 20, and 40	28
	6.5	Drive Sleeve and Housing Cover Disassembly	29
	6.6	Torque Nut Disassembly (Drive 1 Option)	29
	6.7	Thrust Base Disassembly (Drive 2 Option)	30
	6.8	Stem Nut Replacement – Thrust Base Applications	30
	6.9	Reassembly	31
		6.9.1 Declutch Assembly (L120-10)	32
		6.9.2 Declutch Assembly (L120-20/40) (Refer to Figure 6.3)	32
		6.9.3 Install the Motor (Refer to Figure 5.2)	33
		6.9.4 Lubrication Procedure	33
		6.9.5 Install Geared Limit Switch, Torque Switch and Finish Assembly	33
7	**How to Order Parts**		**34**
8	**EC Declaration of Conformity**		**35**

1 Introduction

Flowserve Limitorque actuators are available with a wide range of standard and optional features. Be aware of these features and their role in the setup and operation of the actuator.

1.1 Purpose

This Installation and Maintenance Manual explains how to install and maintain the L120-10, L120-20, and L120-40 actuators. Information on installation, disassembly, reassembly, lubrication, and parts is provided.

1.2 User Safety

Safety notices in this manual detail precautions the user must take to reduce the risk of personal injury and damage to the equipment. The user must read and be familiar with these instructions before attempting installation, operation, or maintenance. Work to be performed on the actuator should be carried out by a qualified tradesman familiar with the operation and maintenance of electric actuators. Failure to observe these precautions could result in serious bodily injury or death, damage to the equipment, voiding of the warranty, or operational difficulty.

Safety notices are presented in this manual in three forms:

☠ **WARNING:** Refers to personal safety. Alerts the user to potential danger. Failure to follow warning notices could result in personal injury or death.

⚠ **CAUTION:** Directs the user's attention to general precautions that, if not followed, could result in personal injury and/or equipment damage.

NOTE: Highlights information critical to the user's understanding of the actuator's installation and operation.

2 Product Inspection - Storage - Identification

☠ **WARNING:** Read this Installation and Maintenance Manual carefully and completely before attempting to install the actuator. Be aware of the electrical hazards.

2.1 Inspection and Recording

Upon receipt of the actuator, inspect the condition of the equipment and record nameplate information:

1. Carefully remove actuator from shipping carton or skid. Thoroughly examine the equipment for any physical damage that may have occurred during shipment. If damaged, immediately report the damage to the transport company.
2. Record the actuator nameplate information for future reference; i.e. ordering parts, obtaining further information.

2.2 Short Term Storage Procedures (less than 1 year)

NOTE: The following are our recommended storage procedures to retain maximum product integrity during short-term storage. Failure to comply with recommended procedures will void the warranty. For longer-term storage, contact Limitorque for procedures and recommendations.

Actuators are not weatherproof until properly installed on the valve or prepared for storage.

Store actuators in a clean, dry, protected warehouse away from excessive vibration and rapid temperature changes. If the actuators must be stored outside, they must be stored off the ground, high enough to prevent them from being immersed in water or buried by snow.

1. Position the actuator in storage with motor and switch compartment horizontal.
2. Connect the internal heaters (if supplied) or place desiccant in the switch compartment.
3. Replace all plastic caps or plugs with pipe plugs and ensure that all covers are tight.
4. If the actuator is mounted on a valve and the stem protrudes from the unit, a suitable stem cover must be provided.

Figure 2.1 – L120-10 through 40

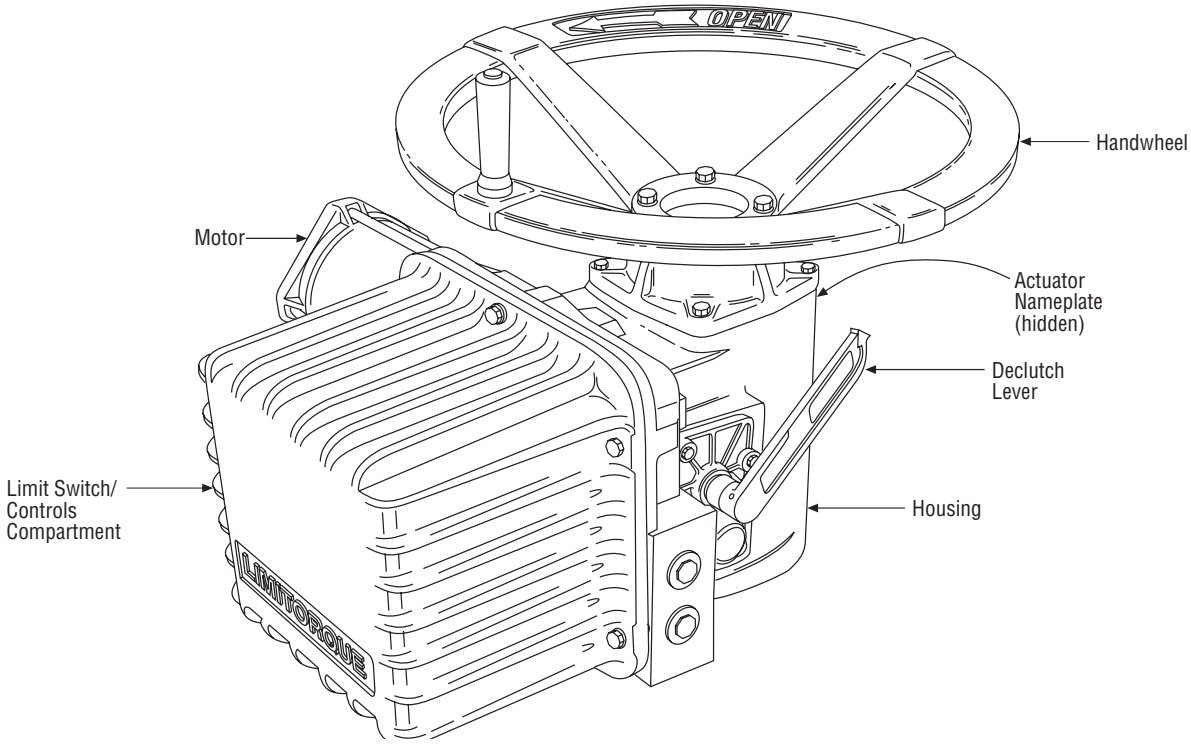

2.3 Product Identification

The actuator unit nameplate is located on the back of the unit, opposite the limit switch compartment.
The nameplate contains the following information:

- Limitorque name
- Point of Manufacture
- Unit Size
- Order Number
- Serial Number
- Customer Tagging
- CE Stamp

The motor nameplate is located on the motor. The nameplate contains the following information:

- ID Number
- Start Torque
- Run Torque
- Enclosure Type
- RPM
- Volts
- Full Load Amps
- Locked Rotor Amps
- Insulation Class
- Duty
- Horsepower
- Service Factor
- Phase
- Cycles
- Motor Code
- Ambient Temperature
- Connection Diagram

3 Actuator Weights

The approximate L120 actuator weights are provided below:

Table 3.1 – Actuator weights

Actuator Size	Control Types	Drive 1 Weight (lb./kg)				Drive 2 Weight (lb./kg)			
		Top HW		Side HW		Top HW		Side HW	
		lb.	kg	lb.	kg	lb.	kg	lb.	kg
L120-10	NCU	100	45	112	51	107	49	119	54
	BIC	115	52	127	58	122	55	134	61
	CLAMSHELL	140	64	152	69	147	67	159	72
L120-20	NCU	140	64	158	72	153	69	171	78
	BIC	155	70	173	78	168	76	186	84
	CLAMSHELL	180	82	198	90	193	88	211	96
L120-40	NCU	190	86	216	98	212	96	238	108
	BIC	205	93	231	105	227	103	253	115
	CLAMSHELL	230	105	256	116	252	114	278	126

Note: Approximate weights are based on standard explosion-proof construction, with the largest three-phase motor available for the model size.

4 Installation Instructions

4.1 Safety Precautions

- **WARNING:** Read this Installation and Maintenance Manual carefully and completely before attempting to install, operate, or troubleshoot the Limitorque actuator.
- **WARNING:** Be aware of electrical hazards. Turn off incoming power before working on the actuator and before opening the switch compartment.
- **WARNING:** Potential HIGH PRESSURE vessel — be aware of high-pressure hazards associated with the attached valve or other actuated device when installing or performing maintenance on the actuator. For maintenance and/or disassembly of the actuator while installed on the valve, or removal of the actuator from the valve or actuated device, ensure that the actuator is not under thrust or torque load. If the valve must be left in service and under load, the valve stem must be locked in such a way as to prevent any movement of the valve stem.
- **WARNING:** Do not attempt to remove the spring cartridge cap, housing cover, or thrust base from the actuator while the valve or actuated device is under load.
- **WARNING:** Do not manually operate the actuator with devices other than the installed handwheel and declutch lever. Using force beyond the ratings of the actuator and/or using additive force devices such as cheater bars, wheel wrenches, pipe wrenches, or other devices on the actuator handwheel or declutch lever may cause serious personal injury and/or damage to the actuator and valve.
- **WARNING:** Do not exceed any design limitations or make modifications to this equipment without first consulting Limitorque.
- **WARNING:** Actuators equipped with electrical devices (motors, controls) requiring field wiring must be wired and checked for proper operation by a qualified tradesman.
- **WARNING:** Use of the product must be suspended any time it fails to operate properly
- **CAUTION:** Do not use oversized motor overload heaters. Instead, look for the cause of the overload.
- **CAUTION:** Do not operate the valve under motor operation without first setting or checking the limit switch setting and motor direction.
- **CAUTION:** Do not force the declutch lever into the motor operation position. The lever returns to this position automatically when the motor is energized.
- **CAUTION:** Do not depress the declutch lever during motor operation to stop valve travel.
- **CAUTION:** Do not use replacement parts that are not genuine Flowserve Limitorque parts, as serious personal injury and/or damage to the actuator and valve may result.
- **CAUTION:** Eye bolts may be used to lift the actuator for installation on the valve or actuated device. Do not lift actuator/valve or actuator/gearbox combinations using eye bolts in the L120 actuator.
- **CAUTION:** Do not lift the actuator by the handwheel.

4.2 Safety Practices

The following checks should be performed to maintain safe operation of the L120 actuator.

- Mount motors on a horizontal plane, if possible.
- Keep the controls compartment clean and dry.
- Keep the valve stem clean and lubricated.
- Set up periodic operating schedule for infrequently used valves.
- Carefully check for correct motor rotation direction. If the motor is driving the valve in the wrong direction, interchange any two leads on three-phase motors or switch the armature leads on DC and single-phase motors.
- Use a protective stem cover. Check valve stem travel and clearance before mounting covers on rising stem valves.
- Verify all actuator wiring is in accordance with the applicable wiring diagram, national and local codes, and Table 4.1.

Table 4.1 – Required Rating for External Wiring

Up to:	Use wire rated at least:
40°C	60°C
60°C	75°C

4.3 Initial Actuator Preparation

Replace all molded plastic conduit and top protectors (installed for shipping purposes only) with pipe plugs when installation wiring is complete.

4.3.1 Mounting Base

The mounting hole sizes and quantities are as detailed in Table 4.2.

Table 4.2 – Mounting Base Dimensions

Actuator Size	Mounting Holes	Tap size	
	Quantity	MSS	ISO
L120-10	4	⅜-16x0.88	M10x1.5x22.4
L120-20	4	⅝-11x1.25	M16x2x32
L120-40	4	⅝-11x1.25	M16x2x32

4.3.2 Stem Acceptance

The maximum stem acceptance is provided in Table 4.3.

Table 4.3 – Maximum Stem Acceptance

Actuator size	Drive 2		Drive 1			
	Tapped		Bore		Key	
	inch	mm	inch	mm	inch	mm
L120-10	1.25	32	1.00	25	¼x3/32	8x6
L120-20	2.25	57	1.875	47	½x3/16	14x9
L120-40	2.625	66	2.125	52	½x3/16	16x10

4.4 Torque Switch

The torque switch is designed to protect the actuator in open and close directions.

⚠ **CAUTION:** Disconnect all incoming power before opening limit switch compartment or working on the torque switch.

- Do not use abrasive cloth to clean the contacts on the torque switch.
- Do not torque seat 90° operation valves nor run them against the stops. This may cause damage to the valve.

NOTE: If the actuator has "torqued out," release torque buildup by operating the actuator manually.

4.4.1 Setting Torque Switch

The torque switch was set at the factory according to customer-supplied information regarding necessary torque or thrust output that was provided at the time of the order. However, if the setting needs to be adjusted, perform the following procedure:

Item letters correspond to Figure 4.1.

1. Place the L120 actuator in manual mode.
2. Release the load on the wormshaft spring pack.
3. For open and close directions, loosen Screw (A) and move Pointer (B) to desired position. A higher number indicates a high torque and/or thrust output.
4. Tighten Screw (A).
5. Operate the valve electrically to seat valve and to ensure tight shutoff.
6. Rebalance torque switch if required.

⚠ **CAUTION:** A torque switch limiter plate is provided on most actuators.

- Removal or modification of the torque switch limiter plate will void the actuator warranty.
- Do not exceed the setting indicated by this plate without contacting the Limitorque service department.
- Installing or adjusting the torque switch with the actuator in a loaded condition will result in a loss of torque protection.

Figure 4.1 – Microswitch-Style Torque Switch and 300 Volt Torque Switch

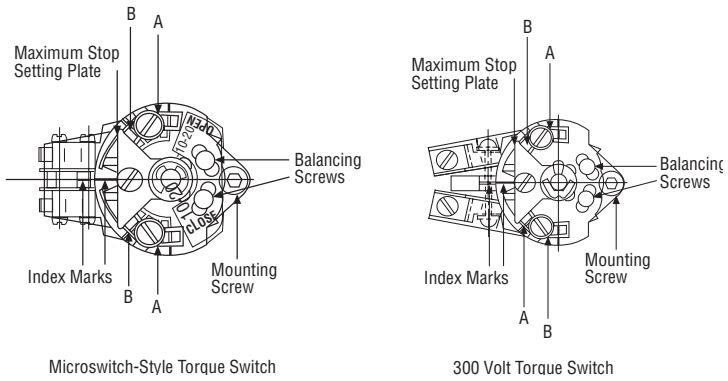

4.4.2 Balancing Torque Switch

Item letters correspond to Figure 4.1.

1. Place the actuator in manual mode.
2. Remove the load from the wormshaft spring pack.
3. Note the open and close torque switch settings prior to reinstalling the torque switch.
4. Loosen Screws (A) and position both Pointers (B) at the #1 setting, tighten Screw (A). In this position the index marks should be aligned.
5. Loosen balancing screws and install the torque switch. The base of the torque switch should be flush against the compartment and the hole for the mounting screw should be aligned.
6. Install the mounting screw.
7. Tighten the balancing screws.

▲ **CAUTION:** The balancing screws should not be touched except during the balancing procedure.

The switch is now balanced and ready for the pointers to be returned to their original settings.

4.5 Geared Limit Switch

▲ **CAUTION:** The geared limit switch is not preset at the factory and must be adjusted after the actuator has been mounted on associated equipment.

- Disconnect all incoming power to the actuator prior to opening the limit switch compartment and adjusting the switch.
- Consult the relevant wiring diagram for limit switch contact development. All L120 units are supplied with 16-contact limit switches - four switches on each of the four rotors. Two rotors are used for end of travel indication. The remaining two rotors may be adjusted for any intermediate point of travel.
- Do not use abrasive cloth to clean the contacts on the limit switch.
- Do not attempt to repair gearing in the limit switch. Replace entire gear frame assembly if necessary.

4.5.1 Setting Limit Switch

Set the limit switch as follows. All item letters and piece numbers refer to Figure 4.2.

NOTE: See chart below for maximum number of drive sleeve turns for each unit size. The Intermediate Shaft (B), shown in Figure 4.2, may take a considerable number of turns before rotor trip occurs.

Table 4.4 – Maximum Number of Drive Sleeve Turns for Standard Four-Gear and Optional Five-Gear Limit Switches

Actuator Size	Four-Gear	Five-Gear
L120-10	630	6300
L120-20	740	7400
L120-40	640	6400

WARNING: Potential Explosion Hazard. Do not use a variable speed electric drill for setting the limit switch in an explosive environment.

CAUTION: When setting the limit switch rotor segments (cams) using a variable speed electric drill, do not run drill at speeds higher than 200 RPM. Operating the drill at high speeds can damage the gearing within the limit switch.

Figure 4.2 – Limit Switch

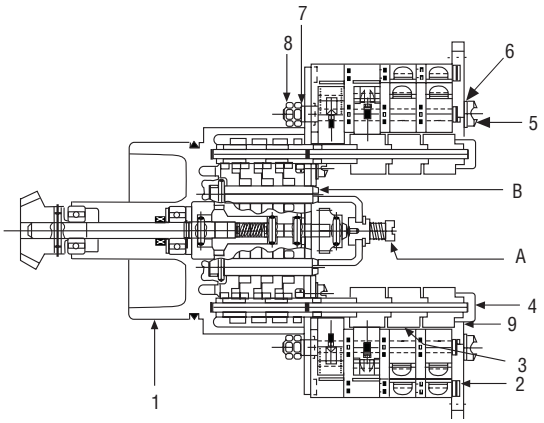

Piece	Quantity	Description
1	1	Gear Frame Assembly
2	2	Eight-Switch Contact Block Assy.
3	12	Rotor Segment (short)
4	4	Rotor Shaft
5	4	Machine Screw
6	4	Flat Washer
7	4	Lock Washer
8	8	Hex Nut
9	4	Rotor Segments (long)

4.5.2 Setting Procedure (Refer to Figure 4.2)

1. Open the Compartment Cover (piece #200 of Figure 5.2).
2. Put the actuator into manual operation. Use the handwheel to operate the valve in the “open” direction. While operating the valve, note the direction of the Intermediate Shaft (B) corresponding to the rotor or rotors to be set.
3. When the valve is fully open, close it one turn of the handwheel to allow for coast of moving parts or refer to the valve manufacturer setting requirements.
4. Push in the Setting Rod (A) and turn one-quarter turn. The rod will latch in this depressed position.
5. Refer to the applicable wiring diagram for contact development. The limit switch contact is closed when the rotor is engaged with the plunger. If the rotor to be set has not turned 90 degrees to operate the plunger, turn the intermediate shaft in the same direction as noted in Step 2 until the rotor clearly trips the switches. This rotor is now set correctly.
6. Before moving the valve, depress and turn the Setting Rod (A) one-quarter turn to the spring released position. Insert a screwdriver into the intermediate shafts to ensure that they will not move.

CAUTION: Do not operate the valve when Setting Rod (A) is in a fully depressed position. Loss of contact setting will occur and the setting rod will be damaged.

7. Operate the valve by handwheel to fully “close” position; reverse direction by one turn of the handwheel to allow for coast of moving parts or refer to the valve manufacturer setting requirements.
8. Set the other rotors by following Steps 4 through 6.

Figure 4.3 – Setting the open and closed contacts

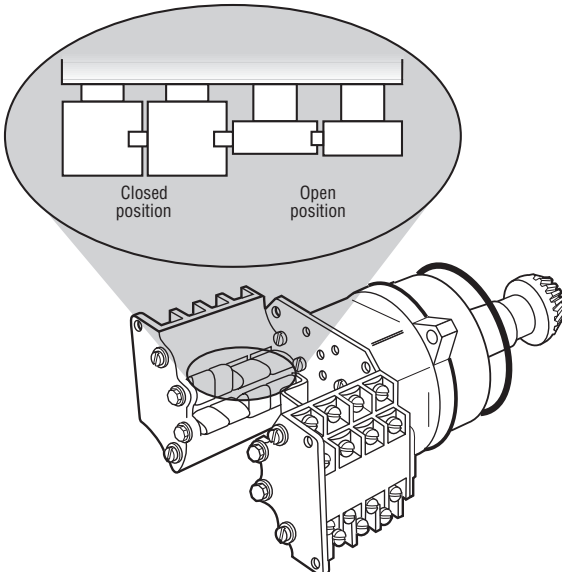

4.5.3 Combination of Contacts (Refer to Figure 4.2)

The rotor segments can be separated and rotated through 90 degrees to give various combinations of normally open or normally closed contacts to each rotor.

1. Remove Nuts (piece 8) and Fillister Head Machine Screws (piece 5, for a total of two fasteners on each side of the switch).
2. Remove complete contact assembly from the back plate.
3. Rearrange cams on the camshaft to produce the required combination of contacts.
4. Replace contact assembly on back-plate (ensuring that the registers fit correctly) and secure with the machine screw and nuts.
5. Set limits according to the procedure above.

4.6 Position Indication

4.6.1 Local position indication

The local dial position indicator is factory-selected to show valve position. The position indicator can only be adjusted when mounted on the valve.

To set the local position indicator:

1. Disconnect all incoming power and remove Switch Compartment Cover (piece 200 of Figure 5.2).

2. Place the valve in the fully “close” position.

3. Loosen the round head machine screw which holds the pointer in place, move the pointer to the “O” position, and retighten the screw.

The indicator is now set.

NOTE: The end-of-travel rotors of the geared limit switch activate “Flip-flop” type indicators. This type of indicator will require no further setting after the geared limit switch has been adjusted.

4.6.2 Remote Position Indication

The L120 actuator with a position transmitter installed, transmits a 4-20 mA output signal to a remote position indicator. The transmitter responds to input of a 1K (ohms) potentiometer and can be powered by 18 VAC or 24 VDC.

NOTE: The pinion has been left disengaged to prevent damaging of rheostat prior to setting the valve. Set rheostat by turning pinion until the desired reading is obtained. Loosen the hex nut on the back of the rheostat and slide the rheostat in the direction of the idler pinion until pinions are engaged. Do not force engagement of the pinions. Retighten hex nut on back of the rheostat. Do not engage pinion until unit and valve have been set.

To Calibrate Position Transmitter

1. Position the actuator to mid-travel: valve at 50% position.
2. Disconnect the potentiometer wiring harness from the transmitter board and measure the resistance from each end connection to the center connection on the potentiometer.
3. Set the potentiometer to the correct resistance reading. Loosen the set screw that retains the spur gear on the potentiometer shaft and rotate the shaft until a reading of 500 ohms is achieved.
4. Tighten the set screw and reconnect the wiring harness.
5. Run the actuator fully CLOSED.
6. Calibrate ZERO position by adjusting the zero potentiometer until a 4 mA output signal is read at terminal +VE and -VE.
7. Run the actuator fully OPEN.
8. Calibrate SPAN position by adjusting the span potentiometer until a 20 mA output signal is read at terminals +VE and -VE.
9. Repeat steps 5 to 8 and fine-tune as necessary.

Figure 4.4 – 1000 ohm Potentiometer

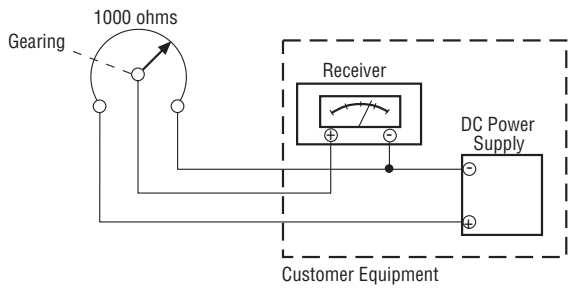

Typical Connection for a 1000 ohm Potentiometer

4.7 Optional Side-Mounted Handwheel

For actuator sizes L120-10, 20, and 40, the handwheel can be mounted on the side as shown in the following figures.

Figure 4.5 – L120-10 parts list, attachment ratio 4.2:1

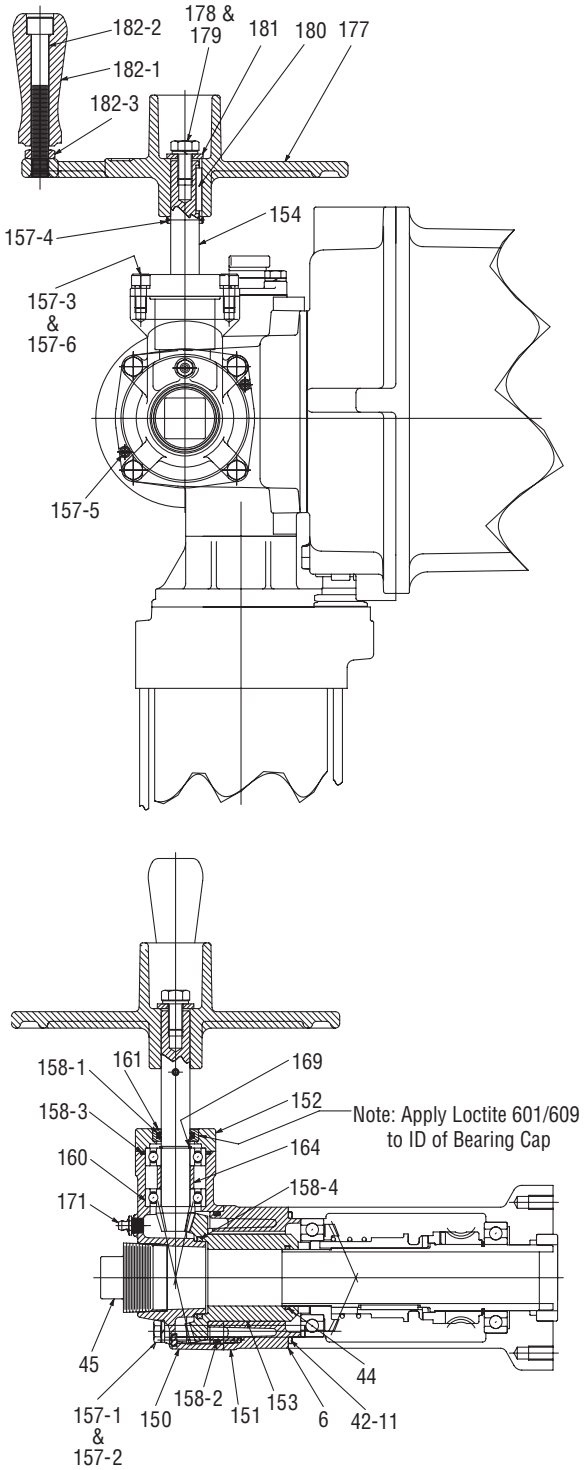

Piece	Quantity	Description
6	1	Housing Cover Shim
42-11	1	O-Ring / Handwheel Mounting
44	1	Quad Ring
45	1	Pipe Plug
150	1	Bevel Housing
151	1	Bevel Housing Adapter
152	1	Bearing Cap
153	1	Bevel Gear
154	1	Bevel Pinion Shaft
157-1	4	Hex Head Cap Screw
157-2	4	Lockwasher
157-3	2	Socket Head Cap Screw
157-4	1	Roll Pin
157-5	2	Socket Head Cap Screw
157-6	2	Lockwasher
158-1	1	Quad Ring
158-2	1	O-Ring
158-3	1	O-Ring
158-4	1	Quad-Ring
160	2	Ball Bearing
161	1	Seal Insert
164	1	Spacer
169	1	Retaining Ring
171	1	Grease Fitting
177	1	Handwheel
178	1	Hex Head Cap Screw
179	1	Lockwasher
180	1	Key
181	1	Retaining Washer
182-1	1	Handwheel Spinner
182-2	1	Socket Head Cap Screw
182-3	1	Hex Jam Nut

Figure 4.6 – L120-20 with side-mounted handwheel and parts list, attachment ratio 5.7:1

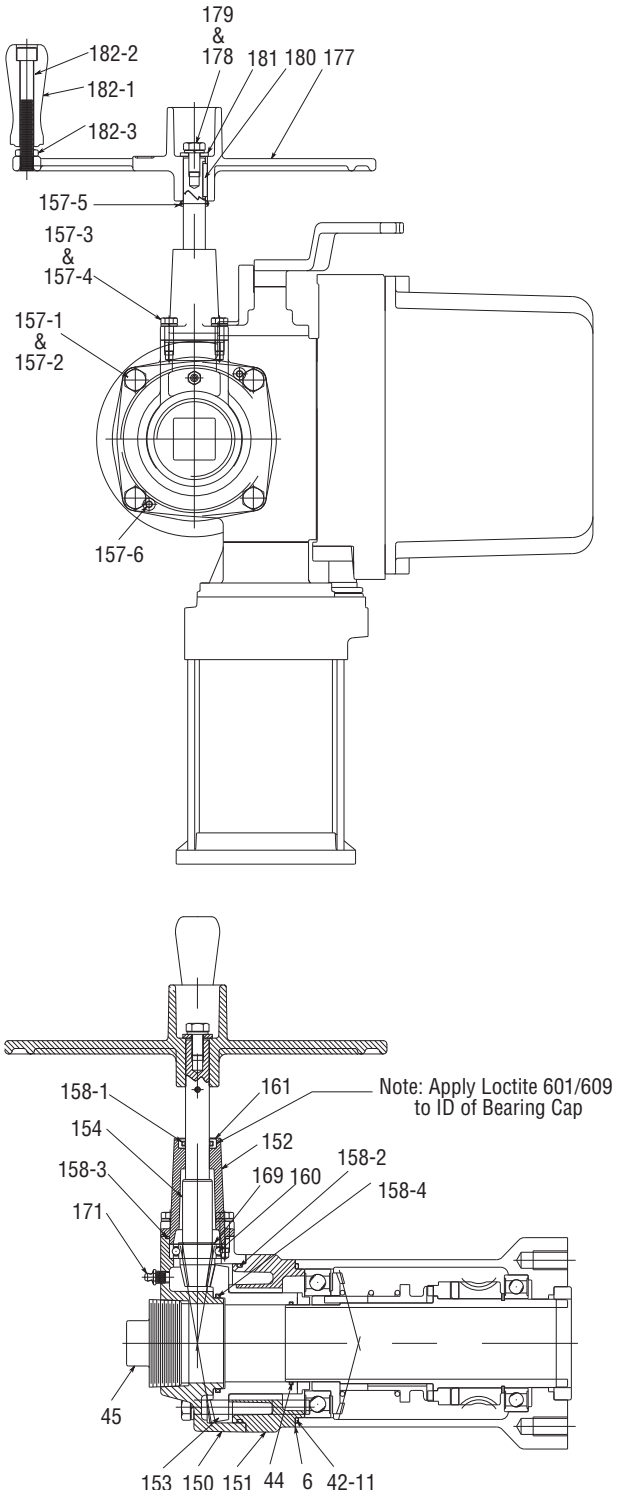

Piece	Quantity	Description
6	1	Housing Cover Shim
42-11	1	O-Ring / Handwheel Mounting
44	1	Quad Ring
45	1	Pipe Plug
150	1	Bevel Housing
151	1	Bevel Housing Adapter
152	1	Bearing Cap
153	1	Bevel Gear
154	1	Bevel Pinion Shaft
157-1	4	Hex Head Cap Screw
157-2	4	Lockwasher
157-3	4	Hex Head Cap Screw
157-4	4	Lockwasher
157-5	1	Roll Pin
157-6	2	Socket Head Cap Screw
158-1	1	Quad-Ring
158-2	1	O-Ring
158-3	1	O-Ring
158-4	1	Quad Ring
160	1	Ball Bearing
161	1	Seal Insert
169	1	Retaining Ring
171	1	Grease Fitting
177	1	Handwheel
178	1	Hex Head Cap Screw
179	1	Lockwasher
180	1	Key
181	1	Retaining Washer
182-1	1	Handwheel Spinner
182-2	1	Socket Head Cap Screw
182-3	1	Hex Jam Nut

Figure 4.7 – L120-40 with side-mounted handwheel and parts list, attachment ratio 12:1

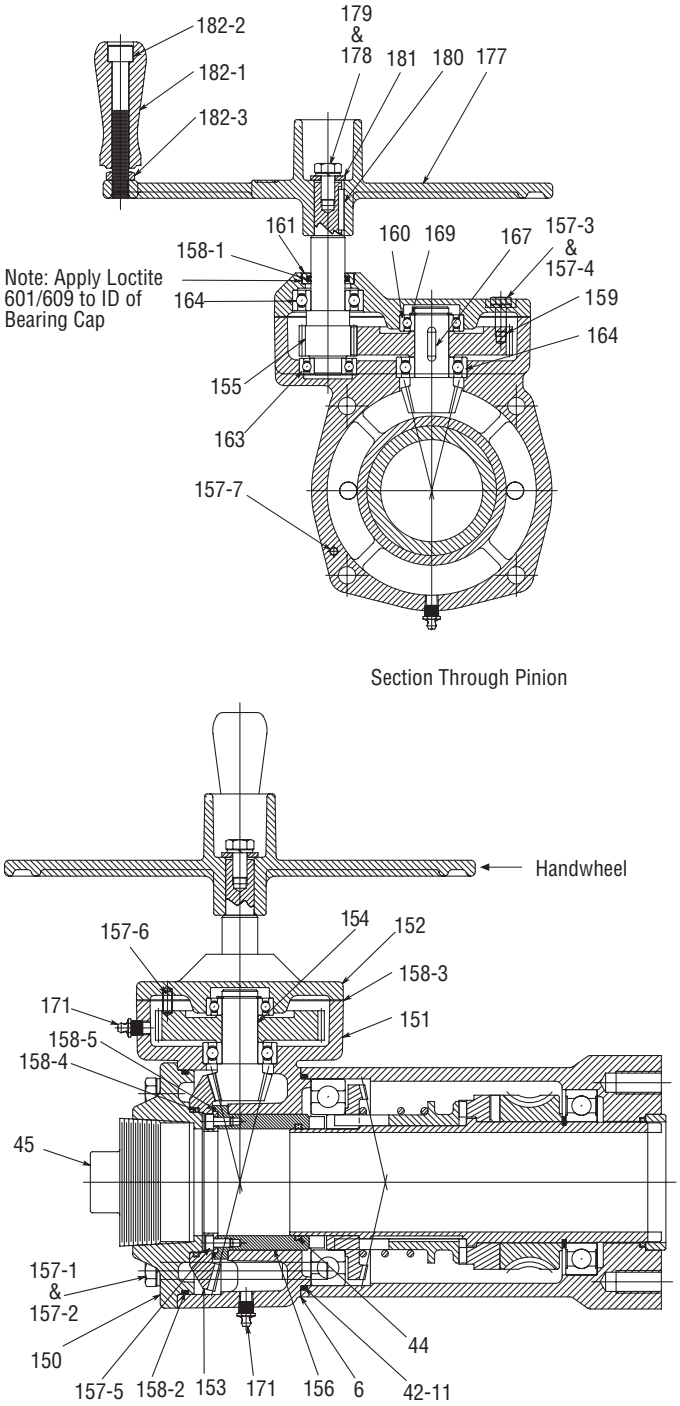

Piece	Quantity	Description
6	1	Housing Cover Shim
42-11	1	O-ring / Handwheel Mounting
44	1	Quad Ring
45	1	Pipe Plug
150	1	Bevel Housing Cover
151	1	Bevel Housing
152	1	Spur Gear Cover
153	1	Bevel Gear
154	1	Bevel Pinion
155	1	Input Pinion Shaft
156	1	Bevel Gear Adapter
157-1	4	Hex Head Cap Screw
157-2	4	Lockwasher
157-3	4	Hex Head Cap Screw
157-4	4	Lockwasher
157-5	8	Socket Head Cap Screw
157-6	2	Dowel Pin
157-7	1	Socket Head Cap Screw
158-1	1	Quad Ring
158-2	1	O-ring
158-3	1	Gasket
158-4	1	Quad Ring
158-5	1	O-ring
159	1	Spur Gear
160	1	Ball Bearing
161	1	Seal Insert
163	1	Ball Bearing
164	2	Ball Bearing
167	1	Key
169	1	Retaining Ring
171	1	Grease Fitting
177	1	Handwheel
178	1	Hex Head Cap Screw
179	1	Lockwasher
180	1	Key
181	1	Retaining Washer
182-1	1	Handwheel Spinner
182-2	1	Socket Head Cap Screw
182-3	1	Hex Jam Nut

5 Operation

☠ **WARNING:** Do not manually operate the actuator with devices other than installed Handwheel and Declutch Lever. Using force beyond the ratings of the unit and/or using additive force devices such as cheater bars, wheel wrenches, pipe wrenches or other devices on the actuator Handwheel or Declutch Lever may cause serious personal injury and/or damage to the actuator or valve.

⚠ **CAUTION:** Do not motor-operate the valve without first setting or checking the limit switch setting and motor direction.

- Do not force the declutch lever into hand operation. If the clutch does not easily engage, rotate handwheel slowly while operating the declutch lever.
- Do not alternately start/stop the motor to open or close a valve which is too tight for normal operation.

5.1 Electrical Start-up

1. Verify that the actuator has been correctly lubricated. This is particularly important if the actuator has been in long-term storage.
2. Verify that the geared limit switch has been correctly set (see Section 4.5.1, Setting Limit Switch).
3. If the valve stem is not visible, remove the stem cover or handwheel cover plate to observe output direction of the drive sleeve.
4. Engage manual operation and hand crank the valve well away from end of travel positions.
5. Turn on power supply and push button to “open.”
6. Check output rotation:
   - If phase rotation is correct, the valve should begin to open.
   - If valve begins to CLOSE, STOP immediately. Incorrect phase rotation will lead to serious damage if the valve seats.

7. Correct the phase rotation one of two ways:
   - Switch any two of the three power leads for three-phase power, or
   - Reverse the armature leads for single-phase or DC power.

The actuator should operate correctly and will be stopped at the end of travel positions by torque or limit switch functions.

Table 5.1 – Required Rating for External Wiring

Up to	Use wire rated at least
40°C	60°C
60°C	75°C

Figure 5.1 is a representation of a typical application and may not be applicable to your specific actuator. Please refer to the wiring diagram supplied with your actuator to confirm the actual equipment supplied.

5.2 Manual Operation

Piece numbers refer to Figure 5.2.

Counterclockwise rotation of the Declutch Lever (piece 9) causes the declutch actuator to lift the clutch sleeve out of engagement with the worm gear. Drive lugs on top of the clutch sleeve engage matching lugs in the Handwheel Adapter (piece 26) and then latches engage the clutch sleeve in this position. The actuator is now in the handwheel driving option. Energizing the motor at this point will cause the latches to drop out and the spring-loaded clutch sleeve reengages with the lugs on the worm gear. The actuator is once more in motor operation.

NOTE 1: The shift from manual operation to motor operation is automatic and does not require external positioning of the declutch shaft.

NOTE 2: If the declutch mechanism does not engage, rotate handwheel approximately 30-45° and attempt manual engagement. There is a chance that the lugs on the Clutch Sleeve (piece 19) and Handwheel Adapter (piece 26) are not correctly aligned.

Figure 5.1 (one of two) – L120-10 through 40 typical wiring diagram

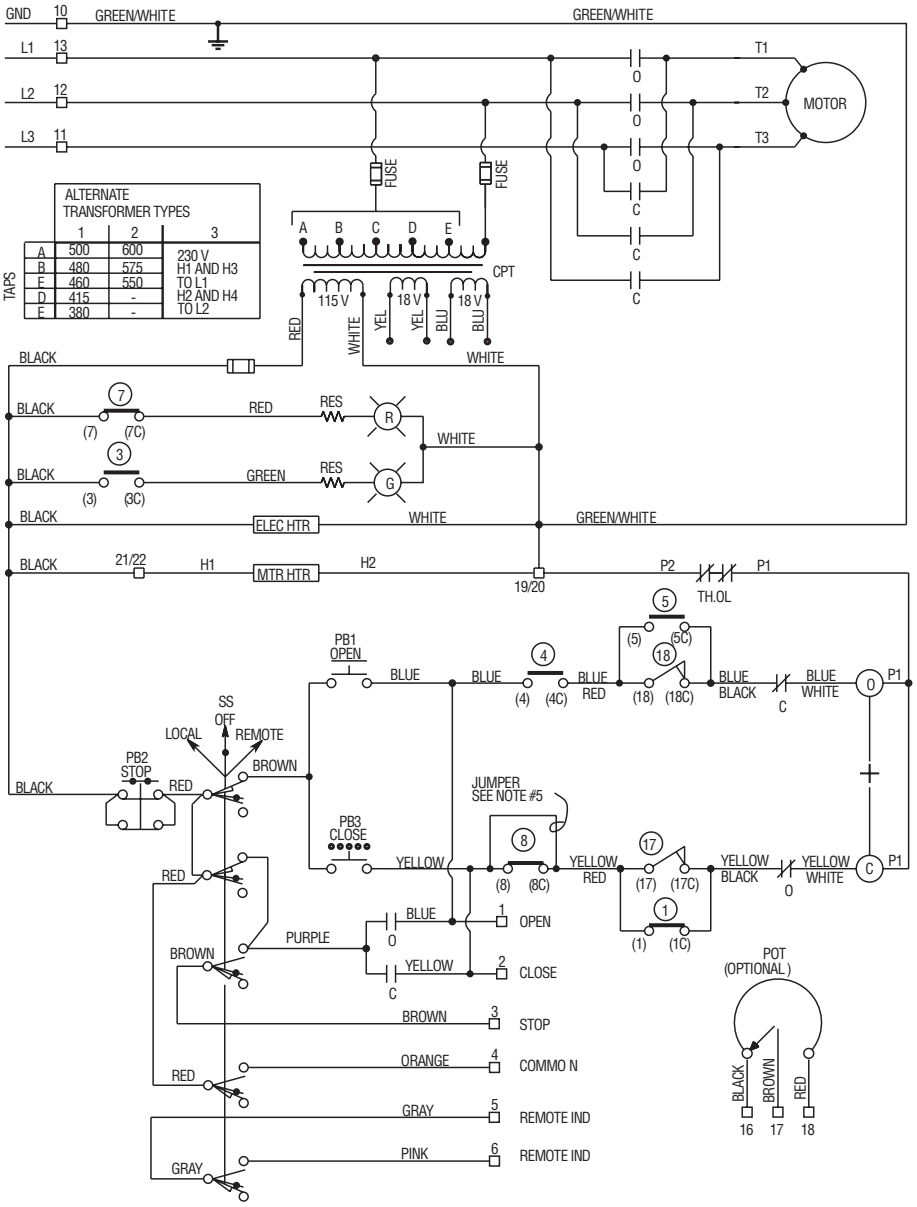

Valve shown in full open position

ROTOR	CONTACT	LIMIT SWITCH CONTACT DEVELOPMENT VALVE POSITION (FULLY OPEN, A, B, FULLY CLOSED)	FUNCTION
OPEN	1		BYPASS CIR
	2		SPARE
	3		IND LIGHT
	4		OPEN LIMIT
CLOSE	5		BY-PASS CIR
	6		SPARE
	7		IND LIGHT
	8		CLOSE LIMIT
INT.1	9		SPARE
	10		SPARE
	11		SPARE
	12		SPARE
INT.2	13		SPARE
	14		SPARE
	15		SPARE
	16		SPARE

(17) CLOSING TORQUE SWITCH INTERRUPTS CONTROL CIRCUIT IF MECHANICAL OVERLOAD OCCURS DURING CLOSING CYCLE

(18) OPENING TORQUE SWITCH INTERRUPTS CONTROL CIRCUIT IF MECHANICAL OVERLOAD OCCURS DURING OPENING CYCLE

Notes
1. - - - - - OPEN CONTACT
2. ▬▬ CLOSE CONTACT
3. SEE CERTIFICATION SHEET FOR VOLTAGE SUPPLIED. TRANSFORMER UNUSED WIRES TO BE SEPARATELY COVERED WITH INSULATING HEAT SHRINK TUBING.
4. ROTORS INT.1 & INT.2 CAN BE SET AT VALVE POSITION FULL OPEN, FULL CLOSED OR ANY POSITION IN BETWEEN AS INDICATED BY POINTS A AND B.
5. ADD JUMPER ON LS#8 BETWEEN TERMINALS (8 & (8C) FOR TORQUE-SEATING VALVES.

Legend
O-OPEN CONTACT
C-CLOSE CONTACT
(O) OPENING COI L
(C) CLOSING COI L
CPT-CONTROL POWER TRANSFORMER
+-MECHANICAL INTERLOCK
TH.OL-THERMAL OVERLOAD CONTACTS
(R) RED INDICATING LIGHT
(G) GREEN INDICATING LIGHT
SS-SELECTOR SWITCH (LOCAL-OFF-REMOTE)
PB1-OPEN PUSHBUTTON
PB2-STOP PUSHBUTTON
PB3-CLOSE PUSHBUTTON
ELEC HTR-COMPARTMENT HEATER
MTR HTR-MOTOR HEATER
POT-POTENTIOMETER (OPTIONAL, SEE CERTIFICATION SHEET IF SUPPLIED)
RES-LAMP RESISTORS

Figure 5.1 (two of two) – L120-10 through 40 typical wiring diagram

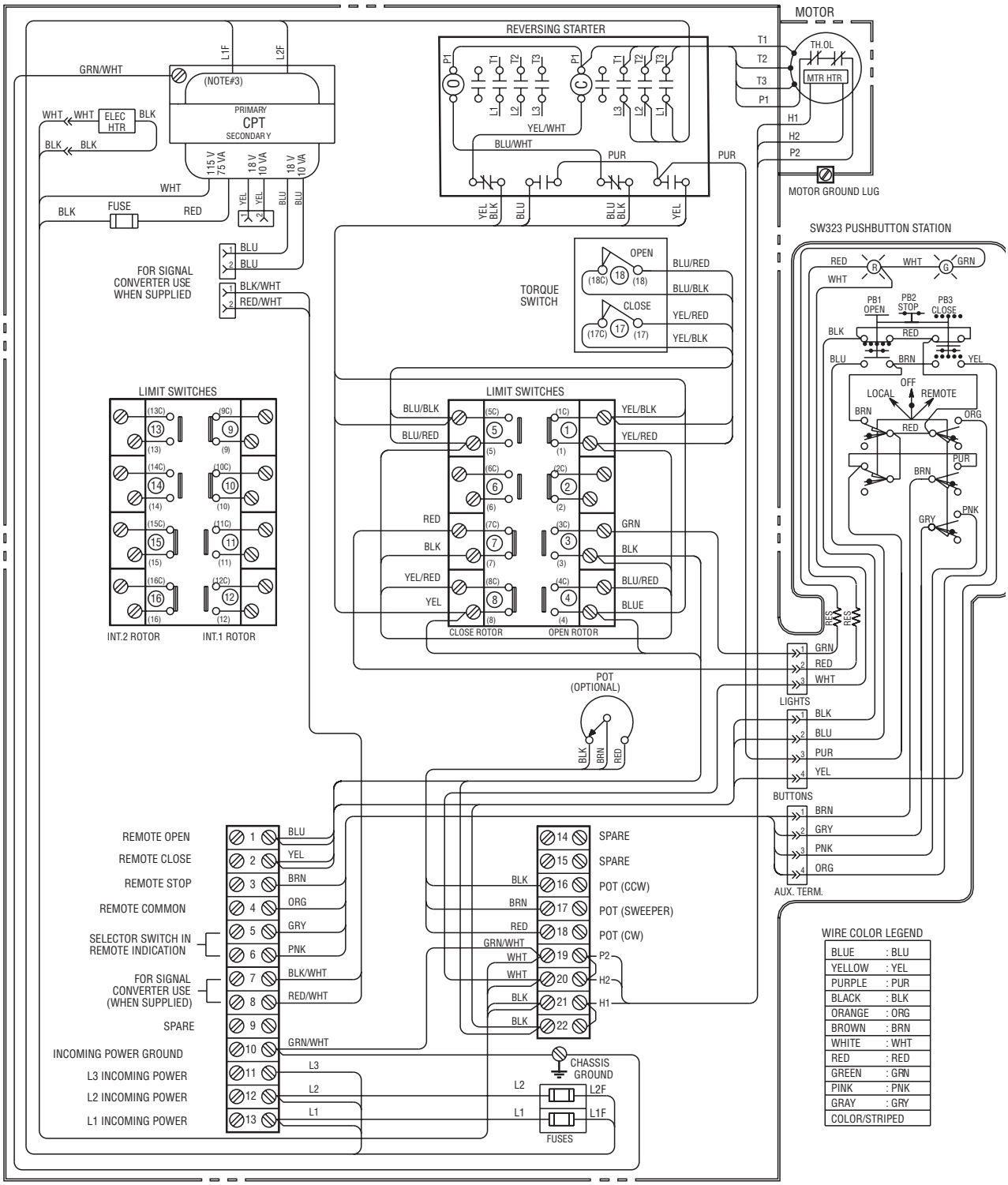

Electrical Compartment

Figure 5.2 (one of two) – L120-10 through 40 drive sleeve and housing cover parts breakdown

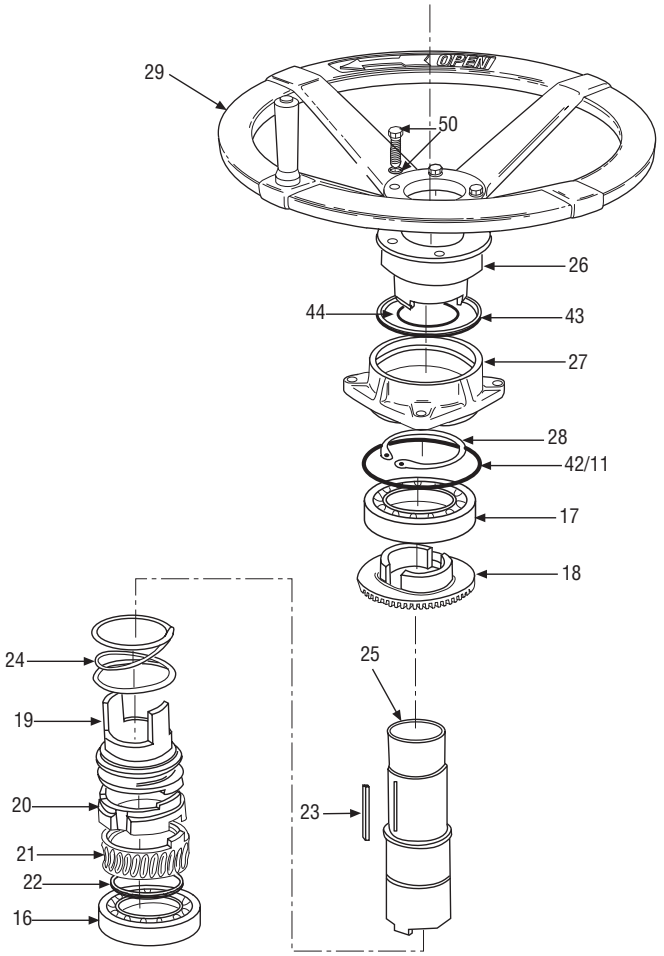

Piece	Quantity	Description
16	1	Ball Bearing
17	1	Ball Bearing
18	1	Drive Sleeve Bevel Gear
19	1	Handwheel Clutch Sleeve
20	1	Worm Gear Lug Ring
21	1	Worm Gear
22	1	Spirolox Retainer
23	1	Key
24	1	Declutch Spring
25	1	Drive Sleeve
26	1	Handwheel Adapter
27	1	Housing Cover
28	1	Retaining Ring
29	1	Handwheel
33	1*	Handwheel Cover Plate
34	1*	Handwheel Cover Plate Gasket
42/11	1	O-ring / Handwheel Mounting
43	1	Quad Ring
44	1	Quad Ring
50	A/R	Hardware

* Not shown

Figure 5.2 (two of two) – L120-10 through 40 parts breakdown

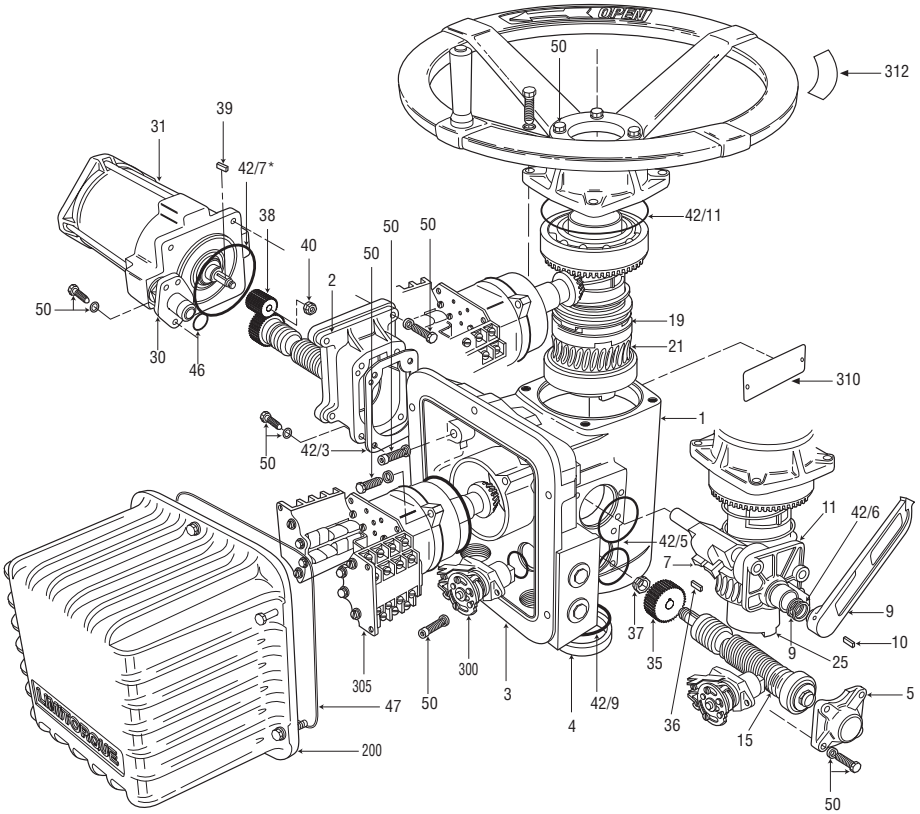

Piece	Quantity	Description
1	1	Housing
2	1	Motor Adapter
3	1	Electrical Compartment
4	1	Seal Retainer
5	1	Worm Shaft End Cap
6	1**	HSG. Cover Shim Set
7	1	Declutch Shaft Assembly
9	1	Declutch Lever
10	1	Roll Pin
11	1	Declutch Cap
15	1	Worm Shaft Assembly
19	1	Clutch Sleeve
21	1	Worm Gear
25	1	Drive Sleeve
30	1	Nipple Flange
31	1	Motor
32	4**	Dowels
35	1	Worm Shaft Gear
36	1	Key
37	1	Flexloc Nut

Piece	Quantity	Description
38	1	Motor Pinion
39	1	Key
40	1	Stop Nut
41	1**	Washer
42	1	Seals Kit
42/3	1	Gasket – Mtr Adapter
42/5	1	O-ring – Declutch Assembly
42/6	1	O-ring – Declutch Lever
42/7	1	O-ring Mtr
42/7*	1	Gasket Mtr
42/9	1	Seal – Drive Sleeve
42/11	1	O-Ring – Handwheel Mounting
46	1	O-ring / Motor Nipple
47	1	O-ring / Cover
50	1	Hardware Kit
200	1	Compartment Cover
300	1	Torque Switch
305	1	Geared Limit Switch
310	1	Unit Nameplate
312	1	Rimpull Nameplate

* L120-40 Only

** Not Shown

5.3 Motor Operation

The actuator is always available for motor operation whenever the motor is energized

⚠ **CAUTION:** Do not force the declutch lever into motor operation. Lever will automatically return to motor operation when the motor is energized.

Reset the travel limit switches prior to motor operation if the actuator has been dismantled or removed from the valve.

Piece numbers refer to Figure 5.2.

In motor operation, the Motor Gear Set (piece 35 and 38) drives the Wormshaft (piece 15) and Worm Gear (piece 21) which in turn rotates the Clutch Sleeve (piece 19) by means of driving the lugs. The clutch sleeve and worm gear may be assembled to produce either a “no lost motion” or “hammerblow” effect. The Drive Sleeve (piece 25) is keyed to the clutch sleeve and hence rotates, producing the required output rotary motion.

5.4 Torque and Travel Limiting

The geared limit switch is driven by a bevel gear connected to the upper drive lugs of the clutch sleeve. The limit switch is directly connected to the output of the actuator. Once properly set, the limit switch remains in step with the valve position regardless of electric or manual operation of the Limitorque actuator.

The worm and wormshaft are supported by two rotating spring packs. As torque is generated by the actuator, the worm moves axially against one of the spring packs. Each pack is precalibrated and hence a finite compression represents a finite torque output. Movement of the worm operates the torque switch, which interrupts the power to the motor. The torque switch is adjustable and can be set to operate at predetermined torque levels.

6 Maintenance

6.1 Lubrication

The L120 series actuators have a sealed gear case, factory-lubricated with grease. The thrust base, when supplied, is factory-lubricated with the same grease as the gear case if the stem nut is factory-machined for the customer's driven shaft. If a blank stem nut is installed in the thrust base, a tag is provided on the actuator advising that the base is not lubricated. The gear case can be mounted in any position. However, mounting of the motor or the switch compartment in the down position is not recommended. These mounting positions may result in the motor or switch compartment being saturated with lubricant if the seal fails.

No seal can remain absolutely tight at all times. Therefore, it is not unusual to find a very small amount of weeping around shaft seals—especially during long periods of idleness such as storage. Using grease minimizes this condition as much as possible. If a small amount is weeping at start-up, remove it with a clean cloth. Once the equipment is operating on a regular basis, the weeping should stop.

6.1.1 Lubrication Inspection

Inspect Limitorque L120 series actuators for correct lubrication prior to operating - particularly following a long storage period.

Each application has its own effect on the actuator and the frequency of these inspections should be based on the application and the operating experience. The following lubrication inspection schedule is recommended until operating experience indicates otherwise.

For the Gear Case, inspect lubrication every 18 months or 500 cycles, whichever occurs first.

During an inspection consider the following:

- Quantity – Ensure there is enough lubricant so that the Worm and the Worm Gear are totally immersed in grease regardless of the position.

Note: The lubricant level can be verified by orienting the actuator with the control compartment facing up. Remove the Geared Limit Switch. The level of lubricant should be within ½ inch of the bottom of the opening in the gear housing.

- Quality – Inspect lubricant for dirt, water or other foreign matter. If any one of these is found:
  1. Flush the actuator with a commercial degreaser/cleaner that is not corrosive and does not affect the seal materials.
  2. Repack the actuator with fresh lubricant allowing room for grease thermal expansion.
- Consistency – Ensure the lubricant is fluid approximating a standard NLGI-0 grade consistency or less.

6.1.2 Factory Lubricant

Gear Case: The L120 series actuator gear case is factory-lubricated with an EP-0 lithium grease, suitable for temperatures from -20°F (-29°C) to +250°F (+121°C).

Table 6.1 – Specified Approximate Lubricant Weights

Actuator Size	lb.	kg
L120-10	2.75	1.3
L120-20	4.25	1.9
L120-40	5.75	2.6

Geared Limit Switch: Permanently lubricated with Beacon 325. Limitorque does not recommend disassembly of the gearbox.

6.2 Minimum Lubricant Qualities Required

The standard lubricants used by Limitorque have been proven to be extremely reliable over years of service. Limitorque does not recommend a particular lubricant substitute for the standard lubricants; however, Limitorque does require the following lubricant qualities as a minimum.

⚠ **CAUTION:** Do not mix lubricants of a different base chemical. Mixing lubricant bases may cause lubricant properties to be ineffective.

The Lubricant must:

- contain an “EP” additive.
- be suitable for the temperature range intended.
- be water and heat-resistant and non-separating.
- not create more than 8% swell in Buna N or Viton.
- not contain any grit, abrasive, or fillers.
- comply with a slump-prefer NLGI-0 grade.
- not be corrosive to steel gears, ball, or roller bearings.
- have a dropping point above 316°F (158°C) for temperature ranges of -20°F (-29°C) to +250°F (+121°C).

6.3 Disassembly and Reassembly

⚠ **CAUTION:** Turn off all power services before attempting to perform service on the actuator.

- Remove the actuator from the valve for complex work. Minor work, such as replacing geared limit switch, torque switch, or motor, may be readily performed while the actuator is still on the valve.
- Potential High-Pressure Vessel. Before removing or disassembling your actuator, ensure that the valve or other actuated device is isolated and is not under pressure.

NOTE: If the actuator is fitted with a Thrust Base (piece 100 of Figure 6.2), it is possible to remove the actuator housing while leaving the base on the valve to accept valve thrust. However, it is preferred that the valve be isolated from service and, if it is a rising stem, that the valve be fully open.

6.4 Disassembly of the L120-10, 20, and 40

Unless otherwise noted, piece numbers refer to the Illustrated Parts Breakdown of Figure 5.2.

1. Turn off power to the actuator.
2. Remove electrical Compartment Cover (piece 200).
3. Disconnect all electrical leads from the Torque Switch (piece 300) and Geared Limit Switch (piece 305). Ensure that all leads and terminals are clearly marked to facilitate reassembly.
4. Remove two screws holding limit switch and one holding torque switch. Remove both items.
5. Remove four bolts holding Motor (piece 31) and three bolts holding conduit Nipple Flange (piece 30). Remove motor, drawing motor leads through switch compartment.
6. Remove Motor Pinion (piece 38) by removing Stop Nut (piece 40).
7. Remove Worm Shaft Gear (piece 35), Flexloc Nut (piece 37), and Worm Shaft End Cap (piece 5) and draw complete wormshaft assembly from housing.

   NOTE: The wormshaft has been assembled at the factory to obtain the correct preload on the spring packs. Do not attempt to disassemble further. If the worm shaft is worn or damaged, it is suggested that the complete wormshaft subassembly be replaced. The actuator must be in motor operation to remove the wormshaft assembly. When the wormshaft is partially out, the disc springs will hit the worm gear. Pull the declutch lever forward slightly without fully engaging the declutch mechanism and the wormshaft will come out.
8. Remove Declutch Cap (piece 11).
9. For unit size L120-10, completely withdraw the Declutch Assembly (piece 7 of Figure 6.3) from the housing. For unit sizes L120-20 and 40, remove Declutch Input Pinion (piece 12 of Figure 6.3) followed by the Declutch Assembly (piece 7 of Figure 6.3).
10. Remove Handwheel (piece 29) and Housing Cover (piece 27) and lift complete drive sleeve subassembly from housing.

6.5 Drive Sleeve and Housing Cover Disassembly

Piece numbers refer to Figure 5.2.

1. Remove Upper Ball Bearing (piece 17), Bevel Gear (piece 18), Declutch Spring (piece 24), Clutch Sleeve (piece 19), and Key (piece 23).
2. Remove Lower Ball Bearing (piece 16).
3. Spirolox Retainer (piece 22) may now be removed by inserting small flat blade screwdriver under the end of the ring and prying the first layer from the groove. Continue around the ring until it is free from the groove.
4. Remove the Worm Gear (piece 21) and the Lug Ring (piece 20).
5. Handwheel Adapter (piece 26) and Seal (piece 42) can be removed from Housing Cover (piece 27) by removing Retaining Ring (piece 28).

6.6 Torque Nut Disassembly (Drive 1 Option)

For applications requiring torque only, the L120 series actuator can be supplied without the thrust base option. The torque nut is driven by the drive sleeve lugs and held in place by the torque bushing connector.

Figure 6.1 – L120-10 through 40 standard and extended drive sleeve assembly

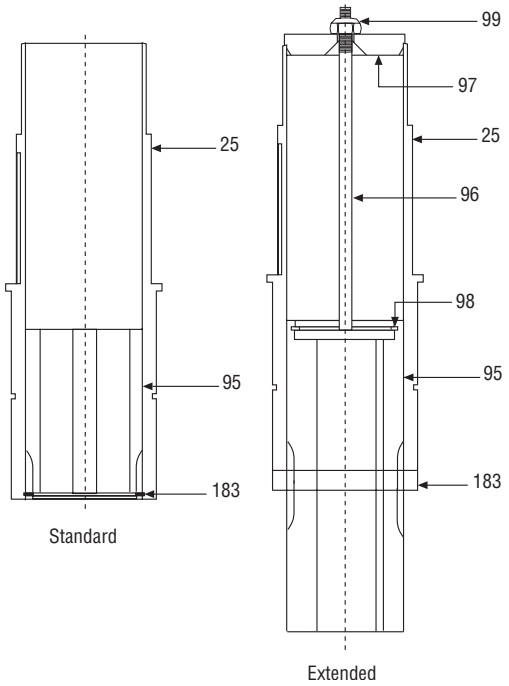

Piece	Quantity	Description
25	1	Drive Sleeve
95	1	Torque Nut
96	1	Torque Bushing Connector
97	1	Torque Bushing Washer
98	1	Retaining Ring
99	1	Elastic Stop Nut
183	1	Retaining Ring

Unless otherwise stated, piece numbers refer to Figure 6.1.

Standard Drive Sleeve

To remove the Torque Nut (piece 95), remove Retaining Ring (piece 183) and drop the torque nut out the bottom of the Drive Sleeve (piece 25 of Figure 5.2).

Optional Drive Sleeve

1. Remove the Handwheel (piece 29 of Figure 5.2), Handwheel Cover Plate (piece 33 of Figure 5.2) and Gasket (piece 34) to provide access to the Elastic Stop Nut (piece 99).
2. Remove the Elastic Stop Nut (piece 99) from the Rod (piece 1). The Torque Nut (piece 95) can now be removed from the bottom of the Drive Sleeve (piece 25 of Figure 5.2).
3. The Torque Bushing Connector (piece 96) can be removed from the torque nut by removing the Retaining Ring (piece 98).

6.7 Thrust Base Disassembly (Drive 2 Option)

Piece numbers refer to Figure 6.2.

1. If the Thrust Base (piece 100) option is present, remove the Seal Retainer (piece 102) followed by Stem Nut (piece 101).
2. Remove the four Hex Head Cap Screws (piece 110) and the Lift Thrust Base from the housing.

Figure 6.2– L120-10 through 40 thrust base

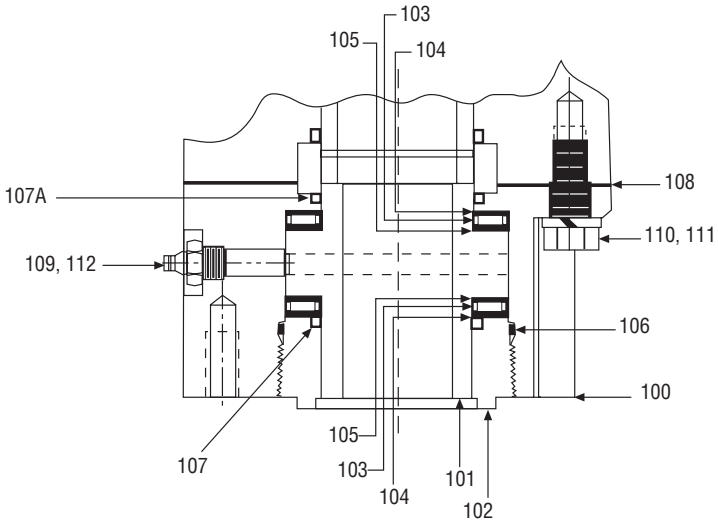

NOTE: For the L120-10, use the same part number for piece #107 and 107A. For the L120-20 and L120-40, use two different part numbers for piece #107 and 107A.

Piece	Quantity	Description
100	1	Base Housing
101	1	Stem Nut
102	1	Seal Retainer
103	2	Needle Bearing
104	2	Thrust Washer
105	2	Thrust Washer
106	1	O-ring Seal
107	1	Quad Ring Seal
107A	1	Quad Ring Seal
108	1	Gasket
109	1	Grease Fitting
110	4	Hex Head Cap Screw
111	4	Lock Washer
112	1	Relief Fitting

6.8 Stem Nut Replacement – Thrust Base Applications

This section is only applicable to thrust base applications. Occasionally the operator stem nut may need replacing if used in a threaded stem application on rising stem valves.

☠ **WARNING:** Possible Hazardous Voltage. Turn power OFF before disassembling or removing the actuator from the mounting base. This will prevent accidental start-up during service to the unit.

☠ **WARNING:** Potential High-Pressure Vessel. Before removing or disassembling the actuator, ensure that the valve or other actuated device is isolated and not under pressure.

⚠ **CAUTION:** The L120-10 through 40 thrust base contains lubrication. Ensure that EP-00 is replaced when reassembling thrust base.

NOTE: Installation and retention of O-rings and quad rings can be eased by applying a small quantity of EP grease to the ring during assembly.

To replace the stem nut:

1. Disconnect all incoming power to the actuator.
2. Remove actuator from the valve.
3. Remove Seal Retainer (piece 102 of Figure 6.2) followed by stem nut, bearings, and seals.
4. Check the fit of the new stem nut on the valve stem - ensure that the nut travels freely without binding.
5. Reassemble the thrust base and remount the actuator on the valve.
6. Remount the actuator on the thrust base.
7. Removing the actuator from the valve will change the limit switch settings. Reset the limit switch in accordance with Section 4.5.1, Setting Limit Switch.
8. Reconnect power.
9. Test for correct functioning.

6.9 Reassembly

Piece numbers refer to Figures 5.1, 5.2, 6.1, 6.2, and 6.3.

1. Install Lug Ring (piece 20) onto Drive Sleeve (piece 25) followed by the Worm Gear (piece 21). Ensure that the worm gear lugs engage with recesses on lug ring.
2. Install Spirolox Retainer (separate layers of retainer sufficiently to begin threading the retainer into the drive sleeve groove. Continue threading until the retainer is firmly located in the groove).
3. Install Key (piece 23) and Clutch Sleeve (piece 19).
4. Add the Declutch Spring (piece 24), Bevel Gear (piece 18), Upper Bearing (piece 17), and Lower Bearing (piece 16) to complete the assembly.
5. Replace the drive sleeve assembly into main housing, and secure with the Housing Cover (piece 27). Ensure that all the seals are in place.
6. Insert Wormshaft Assembly (piece 15) into the housing and locate the bearings in the housing journals. Replace the Wormshaft Cap (piece 5).
7. Install the Wormshaft Gear (piece 35) and Flex Loc Nut (piece 37).

   NOTE: It is recommended that a new flex loc nut be used during reassembly.

Figure 6.3 – L120-10 through 40 declutch assembly parts breakdown

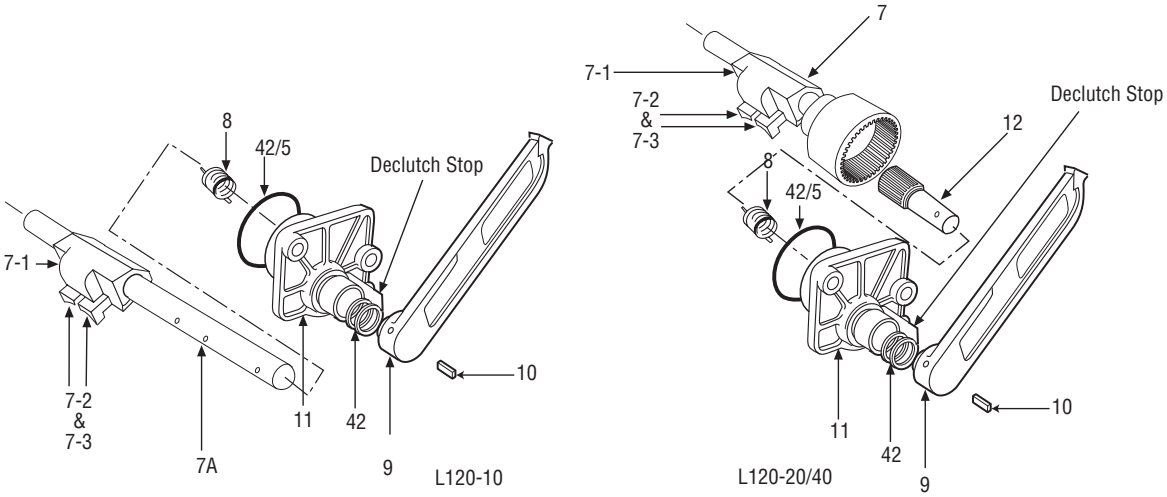

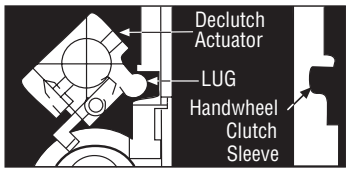

Piece	Quantity	Description
7*	1	Declutch Shaft Assembly L120-20/40
7A	1	Declutch Shaft Assembly
7-1	1	Declutch Actuator
7-2 & 7-3	1	Declutch Latch (left & right)
8	1	Declutch Return Spring
9	1	Declutch Lever
10	1	Roll Pin
11	1	Declutch Cap
12*	1	Declutch Input Pinion
42/5	1	O-ring – Declutch

*L120-20/40 only

6.9.1 Declutch Assembly (L120-10)

8. Install Declutch Cap (piece 11) on the Declutch Shaft (piece 7A). Ensure that the return spring is located correctly in the endcap.

9. Replace Declutch Lever (piece 9) on the shaft with the lever against the stop.

10. While holding the cap steady, rotate the declutch shaft against the spring tension until the holes in the shaft and lever align.

11. Replace complete assembly in main housing. Ensure that the lug on the Declutch Actuator (piece 7-1) fits into the groove on the Handwheel Clutch Sleeve (piece 19 of Figure 5.2).

12. Secure the declutch cap.

    NOTE: When the declutch lever is disengaged against the declutch stop (motor operation position), the Declutch Actuator (piece 7-1) should not be in contact with the groove on the Handwheel Clutch Sleeve (piece 19 of Figure 5.2).

6.9.2 Declutch Assembly (L120-20/40) (Refer to Figure 6.3)

8. Install Declutch Cap (piece 11) on the Declutch Pinion Shaft (piece 12). Ensure that the return spring is located correctly in the slots.

9. Replace Declutch Lever (piece 9) on the pinion and against the stop.
10. While holding the cap steady, rotate the Pinion Shaft (piece 12) against the spring tension until the holes in the shaft and lever align.
11. Insert Roll Pin (piece 10).
12. Slide Declutch Shaft (piece 7) into the housing, ensuring that the Declutch Shaft (piece 7) fits correctly into the groove in the Handwheel Clutch Sleeve (piece 19 of Figure 5.2).
13. Install the declutch cap assembly into the housing, finding the nearest tooth on the internal spur gear which will allow the cap to be secured without placing tension on the Declutch Actuator (piece 7-1) causing it to rub against the groove in the Handwheel Declutch Sleeve (piece 19 of Figure 5.2).

6.9.3 Install the Motor (Refer to Figure 5.2)

1. Install the Motor Pinion (piece 38) and Elastic Stop Nut (piece 40) onto the motor shaft.

   NOTE: The elastic stop nut should not be reused. It is recommended that a new nut be used during reassembly.

2. Install conduit Nipple Flange (piece 30) and Seal (piece 42) onto the conduit nipple in the flange and secure the motor. Secure the nipple flange.

6.9.4 Lubrication Procedure

1. Set unit on mounting base.
2. Grease through the grease fitting located on the motor adapter, watch for grease entering the housing cavity.
3. Grease through the grease fitting in the housing cover until the adapter has been completely greased and grease can be seen entering the drive sleeve compartment.
4. Reposition the unit “nameplate down”.
5. Finish filling housing cavity through the gear limit switch opening to within ½” from the bottom of the gear limit switch opening.

6.9.5 Install Geared Limit Switch, Torque Switch and Finish Assembly

1. Install torque and limit switch into the switch compartment housing.

   NOTE: The limit switch must be reset before the actuator is placed back into service. The Torque Switch may need to be rebalanced. If required see Section 4.4.2, Balancing Torque Switch.

2. Connect all electrical leads in the switch compartment.
3. Replace the compartment cover, handwheel and thrust base, if applicable, to complete the assembly.

7 How to Order Parts

To order parts or obtain further information about your Limitorque L120 valve actuators, contact your local Flowserve Limitorque distributor sales office, or:

Flowserve Limitorque
5114 Woodall Road
Lynchburg, VA 24502
Telephone (434) 528-4400
Fax (434) 845-9736

All inquiries or orders must be accompanied by the following information:

1. Actuator Size

2. Limitorque Order Number

3. Limitorque Serial Number

8 EC Declaration of Conformity

Application of Council Directives

2004/108/EC; EMC Directive

2006/42/EC; Machinery Directive

2003/10/EC; Airborne Noise Directive

Standards to which Conformity is Declared

Machinery; EN 60204-1

EMC; Emissions; EN 55022; 2006

Immunity; IEC 61000-4-6;2007, IEC 61000-4-8: 2001
ESD; IEC 61000-4-2: 2001
EFT Bursts; IEC 61000-4-4: 2004
Surge Immunity; IEC 61000-4-5: 2006

Airborne Noise; MIL-STD-740-1, Table 1, EN 60204

Manufacturer's Name

Flowserve Limitorque

Manufacturer's Address

5114 Woodall Rd Lynchburg, VA 24502 USA

Importer's Name

Flowserve Limitorque

Importer's Address

Flowserve Limitorque
Euro House
Abex Road
Newbury
Berkshire, RG14 5EY
United Kingdom

Type & Description of Equipment

Valve Actuators

Model Number

L120-10,20,40, 85

Note: Tested with Limitorque products only and with standards applicable at time of tests.

I, the undersigned, hereby declare that the equipment specified above conforms to the above Directives and Standards.

Senior Engineer – Certifications, ATEX/IEC-Ex Authorized Person

Flowserve Limitorque
5114 Woodall Road
Lynchburg, VA 24502 USA

Date; December 4, 2012

Flowserve Corporation
Flow Control

United States
Flowserve Limitorque
5114 Woodall Road
P.O. Box 11318
Lynchburg, VA 24506-1318
Phone: 434-528-4400
Facsimile: 434-845-9736

Italy
Flowserve Limitorque
Via Rio Vallone 17
20883 Mezzago (MB), Italy
Phone: +39-039-62060-1
Facsimile: +39-039-62060-213

Japan
Limitorque – Nippon Gear Co., Ltd.
NOF Bldg. 9th Floor
1-11-11, Kita-Saiwai, Nishi-Ku
Yokohama (220-0004)
Japan
Phone: 81-45-326-2065
Facsimile: 81-45-320-5962

Singapore
Flowserve Limitorque
12, Tuas Avenue 20
Singapore 638824
Phone: 65-6868-4628
Facsimile: 65-6862-4940

China
Limitorque Beijing, Pte., Ltd.
RM A1/A2
22/F, East Area, Hanwei Plaza
No. 7 Guanghua Road, Chaoyang District
Beijing 100004, Peoples Republic of China
Phone: 86-10-5921-0606
Facsimile: 86-10-6561-2702

India
Flowserve Limitorque
Office A, 7th Floor, Plot No. 32 A&B
Ambit IT Park, Ambit IT Park Road
Ambattur Industrial Estate,
Chennai - 600058
Phone: 91-44-2432-8755
91-44-2432-4801
Facsimile: 91-44-2432-8754

FCD LMENIM1201-05-A4 03/18 Printed in USA.

To find your local Flowserve representative
or for more information about Flowserve Corporation, visit www.flowserve.com.

Flowserve Corporation has established industry leadership in the design and manufacture of its products. When properly selected, this Flowserve product is designed to perform its intended function safely during its useful life. However, the purchaser or user of Flowserve products should be aware that Flowserve products might be used in numerous applications under a wide variety of industrial service conditions. Although Flowserve can (and often does) provide general guidelines, it cannot provide specific data and warnings for all possible applications. The purchaser/user must therefore assume the ultimate responsibility for the proper sizing and selection, installation, operation, and maintenance of Flowserve products. The purchaser/user should read and understand the Installation Operation Maintenance (IOM) instructions included with the product, and train its employees and contractors in the safe use of Flowserve products in connection with the specific application.

While the information and specifications contained in this literature are believed to be accurate, they are supplied for informative purposes only and should not be considered certified or as a guarantee of satisfactory results by reliance thereon. Nothing contained herein is to be construed as a warranty or guarantee, express or implied, regarding any matter with respect to this product. Because Flowserve is continually improving and upgrading its product design, the specifications, dimensions and information contained herein are subject to change without notice. Should any question arise concerning these provisions, the purchaser/user should contact Flowserve Corporation at any one of its worldwide operations or offices.

© 2015 Flowserve Corporation, Irving, Texas, USA. Flowserve is a registered trademark of Flowserve Corporation.