FLOWSERVE

USER INSTRUCTIONS

Flowserve
M and MX Slurry Pump

Installation
Operation
Maintenance

Standard and Severe Duty (includes MS options)

PCN=71569241 22-06
Original Instructions

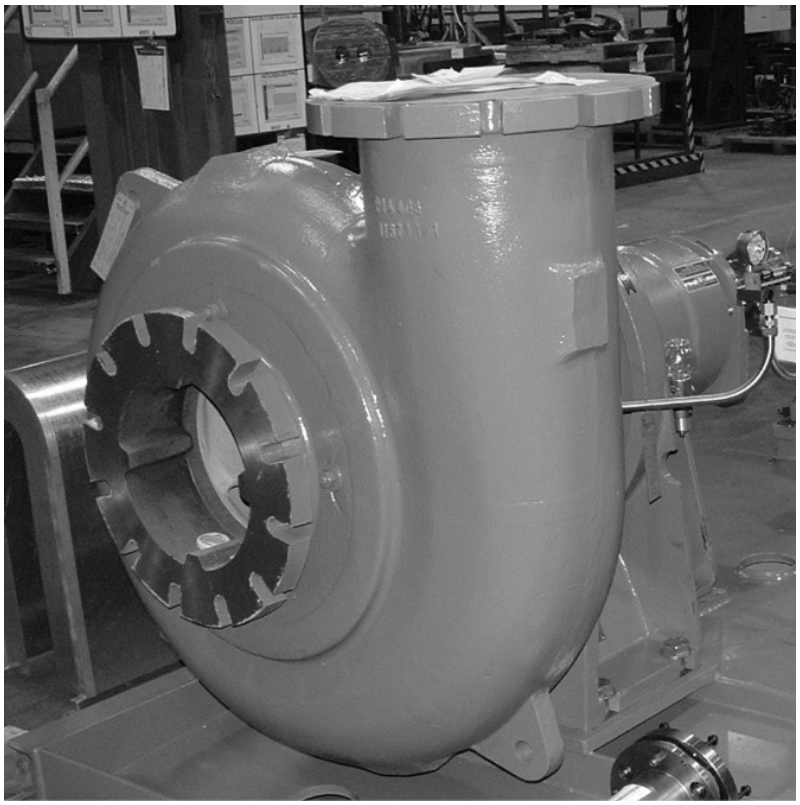

These instructions must be read prior to installing, operating, using, and maintaining this equipment.

Experience In Motion

CONTENTS

PAGE

1 INTRODUCTION AND SAFETY 4
1.1 General 4
1.2 CE marking and approvals 4
1.3 Disclaimer 4
1.4 Copyright 4
1.5 Duty conditions 4
1.6 Safety 5
1.7 Nameplate and warning labels 9
1.8 Specific machine performance 10
1.9 Noise level 10

2 TRANSPORT AND STORAGE 11
2.1 Consignment receipt and unpacking 11
2.2 Handling 11
2.3 Lifting 11
2.4 Storage 11
2.5 Recycling and end of product life 12

3 PUMP DESCRIPTION 12
3.1 Configurations 12
3.2 Name nomenclature 12
3.3 Design of major parts 13
3.4 Performance and operating limits 13
3.5 Engineering Data 15

4 INSTALLATION 22
4.1 Location 22
4.2 Part assemblies 22
4.3 Foundation 22
4.4 Baseplate installation 22
4.5 Initial alignment 23
4.6 Grouting 25
4.7 Piping 25
4.8 Final shaft alignment check 27
4.9 Electrical connections 27
4.10 Protection systems 28

5 COMMISSIONING, START-UP, OPERATION AND SHUTDOWN 28
5.1 Lubrication Methods 28
5.2 Pump lubricants 29
5.3 Direction of rotation 30
5.4 Guarding 30
5.5 Priming and auxiliary supplies 30
5.6 Starting the pump 31
5.7 Running the pump 31
5.8 Stopping and shutdown 32
5.9 Hydraulic, mechanical and electrical duty 32

6 MAINTENANCE 33
6.1 General 33
6.2 Maintenance schedule 33
6.3 Spare parts 36
6.4 Recommended spares and consumable items 36
6.5 Tools required 37
6.6 Fastener torques 37
6.7 Renewal clearances 37
6.8 Disassembly 37
6.9 Examination of parts 39
6.10 Assembly 41
6.11 Impeller axial clearance adjustment 47

7 FAULTS; CAUSES AND REMEDIES 48

8 PARTS LIST AND DRAWINGS 51
8.1 Standard Duties-Frames 1 & 2 51
8.2 Standard Duty-Frames 1&2 with Expeller 52
8.3 Standard Duty Frame 3 & 4 53
8.4 Standard Duty - Frame 3&4 with Expeller 54
8.5 Severe Duty-Frames 2,3 & 4 55
8.6 Severe Duty-Frames 3&4 with Expeller 56
8.7 Severe Duty-Frames 5&6 57
8.8 Severe Duty –Frame 5&6 with Expeller 58
8.9 General arrangement drawing 59

9 CERTIFICATION 59

10 OTHER RELEVANT DOCUMENTATION AND MANUALS 59
10.1 Supplementary User Instruction manuals 59
10.2 Change notes 59
10.3 Additional sources of information 59

INDEX

PAGE
Alignment of shafting (see 4.5, 4.7 and 4.3) 22
CE marking and approvals (1.2) 4
Clearances (see 6.7, Renewal clearances) 34
Clearance setting (6.11) 43
Commissioning and operation (see 5) 27
Configurations (3.1) 12
Direction of rotation (5.3) 29
Dismantling (see 6.8, Disassembly) 35
Duty conditions (1.5) 3
Electrical connections (4.8) 15
Examination of parts (6.9) 25
Faults; causes and remedies 45
General assembly drawings (see 8) 48
Grouting (4.4) 21
Guarding (5.4) 29
Handling (2.2) 9
Hydraulic, mechanical and electrical duty (5.9) 31
Lifting (2.3) 11
Location (4.1) 21
Lubrication schedule (see 5.2, Pump lubricants) 28
Maintenance schedule (6.2) 32
Piping (4.7) 24
Priming and auxiliary supplies (5.5) 29
Reassembly (see 6.10, Assembly) 36
Replacement parts (see 6.3 and 6.4) 34
Safety, electrical (see 4.9) 26
Safety, protection systems (see 1.6) 5
Sound level (see 1.9, Noise level) 8
Specific machine performance (1.8) 8
Starting the pump (5.6) 29
Stopping and shutdown (5.8) 31
Storage (2.4) 9
Supplementary manuals or information sources 56
Tools required (6.5) 34
Torques for fasteners (6.6) 34

1 INTRODUCTION AND SAFETY

1.1 General

⚠ ***These instructions must always be kept close to the product's operating location or directly with the product.***

Flowserve's products are designed, developed and manufactured with state-of-the-art technologies in modern facilities. The unit is produced with great care and commitment to continuous quality control, utilising sophisticated quality techniques, and safety requirements.

Flowserve is committed to continuous quality improvement and being at your service for any further information about the product in its installation and operation or about its support products, repair and diagnostic services.

These instructions are intended to facilitate familiarization with the product and its permitted use. Operating the product in compliance with these instructions is important to help ensure reliability in service and avoid risks. The instructions may not take into account local regulations; ensure such regulations are observed by all, including those installing the product. Always coordinate repair activity with operations personnel, and follow all plant safety requirements and applicable safety and health laws and regulations.

⚠ ***These instructions must be read prior to installing, operating, using and maintaining the equipment in any region worldwide. The equipment must not be put into service until all the conditions relating to safety noted in the instructions, have been met. Failure to follow and apply the present user instructions is considered to be misuse. Personal injury, product damage, delay or failure caused by misuse are not covered by the Flowserve warranty.***

1.2 CE marking and approvals

It is a legal requirement that machinery and equipment put into service within certain regions of the world shall conform with the applicable CE Marking Directives covering Machinery and, where applicable, Low Voltage Equipment, Electromagnetic Compatibility (EMC), Pressure Equipment Directive (PED) and Equipment for Potentially Explosive Atmospheres (ATEX).

Where applicable, the Directives and any additional Approvals, cover important safety aspects relating to machinery and equipment and the satisfactory provision of technical documents and safety instructions. Where applicable this document incorporates information relevant to these Directives and Approvals.

To confirm the Approvals applying and if the product is CE marked, check the serial number plate-markings and the Certification. (See section 9, *Certification*.)

1.3 Disclaimer

Information in these User Instructions is believed to be complete and reliable. However, in spite of all of the efforts of Flowserve Corporation to provide comprehensive instructions, good engineering and safety practice should always be used.

Flowserve manufactures products to exacting International Quality Management System Standards as certified and audited by external Quality Assurance organizations. Genuine parts and accessories have been designed, tested and incorporated into the products to help ensure their continued product quality and performance in use. As Flowserve cannot test parts and accessories sourced from other vendors the incorrect incorporation of such parts and accessories may adversely affect the performance and safety features of the products. The failure to properly select, install or use authorised Flowserve parts and accessories is considered to be misuse. Damage or failure caused by misuse is not covered by Flowserve's warranty. In addition, any modification of Flowserve products or removal of original components may impair the safety of these products in their use.

1.4 Copyright

All rights reserved. No part of these instructions may be reproduced, stored in a retrieval system or transmitted in any form or by any means without prior permission of Flowserve.

1.5 Duty conditions

This product has been selected to meet the specifications of your purchaser order. The acknowledgement of these conditions has been sent separately to the Purchaser. A copy should be kept with these instructions.

⚠ ***The product must not be operated beyond the parameters specified for the application. If there is any doubt as to the suitability of the product for the application intended, contact Flowserve for advice, quoting the serial number.***

If the conditions of service on your purchase order are going to be changed (for example liquid pumped, temperature or duty) it is requested that you/the user

seek the written agreement of Flowserve before start up.

1.6 Safety

1.6.1 Summary of safety markings

These user instructions contain specific safety markings where non-observance of an instruction would cause hazards. The specific safety markings are:

DANGER This symbol indicates electrical safety instructions where non-compliance will involve a high risk to personal safety or the loss of life.

This symbol indicates safety instructions where non-compliance would affect personal safety and could result in loss of life.

This symbol indicates "hazardous and toxic fluid" safety instructions where non-compliance would affect personal safety and could result in loss of life.

CAUTION This symbol indicates safety instructions where non-compliance will involve some risk to safe operation and personal safety and would damage the equipment or property.

This symbol indicates explosive atmosphere zone marking according to ATEX. It is used in safety instructions where non-compliance in the hazardous area would cause the risk of an explosion.

This symbol is used in safety instructions to remind not to rub non-metallic surfaces with a dry cloth; ensure the cloth is damp. It is used in safety instructions where non-compliance in the hazardous area would cause the risk of an explosion.

Note: This sign is not a safety symbol but indicates an important instruction in the assembly process.

1.6.2 Personnel qualification and training

All personnel involved in the operation, installation, inspection and maintenance of the unit must be qualified to carry out the work involved. If the personnel in question do not already possess the necessary knowledge and skill, appropriate training and instruction must be provided. If required the operator may commission the manufacturer/supplier to provide applicable training.

Always coordinate repair activity with operations and health and safety personnel, and follow all plant safety requirements and applicable safety and health laws and regulations.

1.6.3 Safety action

This is a summary of conditions and actions to prevent injury to personnel and damage to the environment and to equipment. (For products used in potentially explosive atmospheres section 1.6.4 also applies.)

DANGER NEVER DO MAINTENANCE WORK WHEN THE UNIT IS CONNECTED TO POWER

GUARDS MUST NOT BE REMOVED WHILE THE PUMP IS OPERATIONAL

DRAIN THE PUMP AND ISOLATE PIPEWORK BEFORE DISMANTLING THE PUMP.
The appropriate safety precautions should be taken where the pumped liquids are hazardous.

FLUORO-ELASTOMERS (When fitted.)
When a pump has experienced temperatures over 250 ºC (482 ºF), partial decomposition of fluoro-elastomers (example: Viton) will occur. In this condition these are extremely dangerous and skin contact must be avoided.

HANDLING COMPONENTS
Many precision parts have sharp corners and the wearing of appropriate safety gloves and equipment is required when handling these components. To lift heavy pieces above 25 kg (55 lb) use a crane appropriate for the mass and in accordance with current local regulations.

THERMAL SHOCK
Rapid changes in the temperature of the liquid within the pump can cause thermal shock, which can result in damage or breakage of components and should be avoided.

NEVER APPLY HEAT TO REMOVE IMPELLER
Trapped lubricant or vapour could cause an explosion.

HOT (and cold) PARTS
If hot or freezing components or auxiliary heating supplies can present a danger to operators and persons entering the immediate area, action must be taken to avoid accidental contact. If complete protection is not possible, the machine access must be limited to maintenance staff only, with clear visual warnings and indicators to those entering the immediate area. Note: bearing housings must not be insulated and drive motors and bearings may be hot.

If the temperature is greater than 80°C (176 °F) or below - 5 °C (23 °F) in a restricted zone, or exceeds local regulations, action as above shall be taken.

HAZARDOUS LIQUIDS
When the pump is handling hazardous liquids care must be taken to avoid exposure to the liquid by appropriate sitting of the pump, limiting personnel access and by operator training. If the liquid is flammable and/or explosive, strict safety procedures must be applied.

Gland packing must not be used when pumping hazardous liquids.

CAUTION PREVENT EXCESSIVE EXTERNAL PIPE LOAD
Do not use pump as a support for piping. Do not mount expansion joints, unless allowed by Flowserve in writing, so that their force, due to internal pressure, acts on the pump flange.

CAUTION NEVER RUN THE PUMP DRY

CAUTION ENSURE CORRECT LUBRICATION
(See section 5, *Commissioning, startup, operation and shutdown*.)

CAUTION START THE PUMP WITH OUTLET VALVE PART OPENED
(Unless otherwise instructed at a specific point in the user instructions.)
This is recommended to minimize the risk of overloading and damaging the pump motor at full or zero flow. Pumps may be started with the valve further open only on installations where this situation cannot occur. The pump outlet control valve may need to be adjusted to comply with the duty following the run-up process. (See section 5, *Commissioning start-up, operation and shutdown*.)

CAUTION NEVER RUN THE PUMP DRY

CAUTION INLET VALVES TO BE FULLY OPEN WHEN PUMP IS RUNNING
Running the pump at zero flow or below the recommended minimum flow continuously will cause damage to the seal.

CAUTION DO NOT RUN THE PUMP AT ABNORMALLY HIGH OR LOW FLOW RATES
Operating at a flow rate higher than normal or at a flow rate with no back pressure on the pump may overload the motor and cause cavitation. Low flow rates may cause a reduction in pump/bearing life, overheating of the pump, instability and cavitation/ vibration.

If the temperature is greater than 68 °C (175 °F) or below 5 °C (20 °F) in a restricted zone, or exceeds local regulations, action as above shall be taken.

1.6.4 Products used in potentially explosive atmospheres

Ex Measures are required to:

- Avoid excess temperature
- Prevent build up of explosive mixtures
- Prevent the generation of sparks
- Prevent leakages
- Maintain the pump to avoid hazard

The following instructions for pumps and pump units when installed in potentially explosive atmospheres must be followed to help ensure explosion protection. For ATEX, both electrical and non-electrical equipment must meet the requirements of European Directive 2014/34/EU. Always observe the regional legal Ex requirements; Ex electrical items outside the EU may be required certified to other than ATEX (example: IECEx, UL).

1.6.4.1 Scope of compliance

Ex Use equipment only in the zone for which it is appropriate. Always check that the driver, drive coupling assembly, seal and pump equipment are suitably rated and/or certified for the classification of the specific atmosphere in which they are to be installed.

Where Flowserve has supplied only the bare shaft pump, the Ex rating applies only to the pump. The party responsible for assembling the ATEX pump set shall select the coupling, driver and any additional equipment, with the necessary CE Certificate/ Declaration of Conformity establishing it is suitable for the area in which it is to be installed.

The output from a variable frequency drive (VFD) can cause additional heating affects in the motor and so, for pumps sets with a VFD, the ATEX Certification for the motor must state that it is covers the situation where electrical supply is from the VFD. This particular requirement still applies even if the VFD is in a safe area.

1.6.4.2 ***Marking***

An example of ATEX equipment marking is shown below. The actual classification of the pump will be engraved on the nameplate.

II 2 GD Ex h IIC T4 Gb

Equipment Group
I = Mining
II = Non-mining

Category
2 or M2 = High level protection
3 = normal level of protection

Gas and/or Dust
G = Gas; D= Dust

h = Ignition Protection Method

Gas Group (*Equipment Category 2 only*)
IIA – Propane (typical)
IIB – Ethylene (typical)
IIC – Hydrogen (typical)

Maximum surface temperature
(Temperature Class)(See section 1.6.4.3.)

EPL
Marking in accordance with the Equipment Protection Level defined in EN ISO 80079-36 & 37

1.6.4.3 ***Avoiding excessive surface temperatures***

ENSURE THE EQUIPMENT TEMPERATURE CLASS IS SUITABLE FOR THE HAZARD ZONE

Pumps have a temperature class as stated in the ATEX Ex rating on the nameplate. These are based on a maximum ambient of 40 °C (104 °F); refer to Flowserve for higher ambient temperatures.

The surface temperature on the pump is influenced by the temperature of the liquid handled. The maximum permissible liquid temperature depends on the temperature class and must not exceed the values in the table that follows.

Maximum permitted liquid temperature for pumps

Temperature class to EN ISO 80079-36	Maximum surface temperature permitted	Temperature limit of liquid handled
T6	85 °C (185 °F)	Consult Flowserve
T5	100 °C (212 °F)	Consult Flowserve
T4	135 °C (275 °F)	115 °C (239 °F) *
T3	200 °C (392 °F)	180 °C (356 °F) *
T2	300 °C (572 °F)	275 °C (527 °F) *
T1	450 °C (842 °F)	400 °C (752 °F) *

The temperature rise at the seals and bearings and due to the minimum permitted flow rate is taken into account in the temperatures stated.

The operator is responsible to ensure that the specified maximum liquid temperature is not exceeded.

Temperature classification “Tx” is used when the liquid temperature varies and when the pump is required to be used in differently classified potentially explosive atmospheres. In this case the user is responsible for ensuring that the pump surface temperature does not exceed that permitted in its actual installed location.

If an explosive atmosphere exists during the installation, do not attempt to check the direction of rotation by starting the pump unfilled. Even a short run time may give a high temperature resulting from contact between rotating and stationary components.

Avoid mechanical, hydraulic or electrical overload by using motor overload trips, temperature monitor or a power monitor and make routine vibration monitoring checks.

In dirty or dusty environments, regular checks must be made and dirt removed from areas around close clearances, bearing housings and motors.

Where there is any risk of the pump being run against a closed valve generating high liquid and casing external surface temperatures fit an external surface temperature protection device.

1.6.4.4 ***Preventing the build up of explosive mixtures***

ENSURE THE PUMP IS PROPERLY FILLED AND VENTED AND DOES NOT RUN DRY

Ensure the pump and relevant suction and discharge pipeline system is totally filled with liquid at all times during the pump operation, so that an explosive atmosphere is prevented. In addition it is essential to make sure that seal chambers, auxiliary shaft seal systems and any heating and cooling systems are properly filled.

If the operation of the system cannot avoid this condition, install an appropriate dry run protection device (for example liquid detection or a power monitor).

To avoid potential hazards from fugitive emissions of vapour or gas to atmosphere the surrounding area must be well ventilated.

1.6.4.5 ***Preventing sparks***

To prevent a potential hazard from mechanical contact, the coupling guard must be non-sparking.

To avoid the potential hazard from random induced current generating a spark, the baseplate must be properly grounded.

Make sure that the connection between pump and baseplate is electrically conductive.

Avoid electrostatic charge: do not rub non-metallic surfaces with a dry cloth; ensure cloth is damp.

For ATEX, the coupling must be selected to comply with 2014/34/EU and correct alignment must be maintained.

Additional requirement for metallic pumps on non-metallic baseplates
When metallic components are fitted on a non-metallic baseplate they shall be individual grounded.

1.6.4.6 ***Preventing leakage***

The pump must only be used to handle liquids for which it has been approved to have the correct corrosion resistance.

Avoid entrapment of liquid in the pump and associated piping due to closing of suction and discharge valves, which could cause dangerous excessive pressures to occur if there is heat input to the liquid. This can occur if the pump is stationary or running.

Bursting of liquid containing parts due to freezing must be avoided by draining or protecting the pump and ancillary systems.

Where there is the potential hazard of a loss of a seal barrier fluid or external flush, the fluid must be monitored.

If leakage of liquid to atmosphere can result in a hazard, install a liquid detection device.

1.6.4.7 ***Maintenance to avoid the hazard***

CORRECT MAINTENANCE IS REQUIRED TO AVOID POTENTIAL HAZARDS WHICH GIVE A RISK OF EXPLOSION

The responsibility for compliance with maintenance instructions is with the plant operator.

To avoid potential explosion hazards during maintenance, the tools, cleaning and painting materials used must not give rise to sparking or adversely affect the ambient conditions. Where there is a risk from such tools or materials, maintenance must be conducted in a safe area.

It is recommended that a maintenance plan and schedule is adopted. (See section 6, *Maintenance.)*

1.7 Safety labels summary

1.7.1 Nameplate

For details of nameplate, see the *Declaration of Conformity,* or separate documentation included with these User Instructions.

1.7.2 Safety labels

CAUTION

MECHANICAL SEAL FITTED

DO NOT ADJUST PUMP CLEARANCE WITHOUT REFERENCE TO MANUFACTURER'S INSTRUCTION MANUAL

MECHANICAL SEAL WARNING
P/N 2113931-001

CAUTION

BEFORE STARTING THE PUMP ON SERVICE, CHECK TO ENSURE CORRECT ROTATION OF MOTOR. FAILURE TO DO THIS COULD RESULT IN SERIOUS DAMAGE TO THE EQUIPMENT.

ROTATION WARNING
P/N 2113932-001

CAUTION

BEFORE GROUTING, REALIGN THIS UNIT. RECHECK ALIGNMENT BEFORE STARTING, FAILURE TO DO THIS COULD RESULT IN SERIOUS DAMAGE TO THE EQUIPMENT. REFER TO INSTALLATION MANUAL AND, OR COUPLING INSTRUCTIONS FOR METHOD OF CHECKING ALIGNMENT.

GROUT WARNING
P/N 2113934-001

CAUTION

THESE EYEBOLTS ARE TO BE USED FOR LIFTING BEARING CARTRIDGE AND SHAFT ONLY. DO NOT USE FOR LIFTING ENTIRE UNIT

LIFTING WARNING
P/N 9901701-001

FLOWSERVE QF-440-R01

LUBRICATION WARNING TAG

LUBRICATION WARNING - CAUTION

The lubricating oil in this pump has been drained for shipping. The proper lubricating oil must be added before starting pump. Refer to Instruction Manual.

ADVERTISSEMENT PUR LE GRAISSAGE - ATTENTION

Avant expédition de la pompe, l'huile de graissage a été vidée. Il faut ajouter l'huile appropriee avant d'utiliser la pompe. Voir le Mode D'emploi.

ADVERTENCIA RESPECTO A LA LUBRICACIÓN - CUIDADO

El aceite lubricante de este bombeador ha sido vaciado por razones de envio. Antes de comenzar a bombear, deberá agregarse el aceite lubricante correcto. Consutar el Manual de Instrucciones.

LUBRICATION WARNING – QF-440-R01 (2124841)

Oil lubricated units only:

1.8 **Specific machine performance**
For performance parameters see section 1.5, *Duty conditions*. When the contract requirement specifies these to be incorporated into User Instructions these are included here. Where performance data has been supplied separately to the purchaser these should be obtained and retained with these User Instructions if required.

1.9 **Noise level**
When pump noise level exceeds 85 dBA attention must be given to prevailing Health and Safety Legislation, to limit the exposure of plant operating personnel to the noise. The usual approach is to control exposure time to the noise or to enclose the machine to reduce emitted sound. You may have already specified a limiting noise level when the equipment was ordered, however if no noise requirements were defined then machines above a certain power level will exceed 85 dBA. In such situations consideration must be given to the fitting of an acoustic enclosure to meet local regulations.

Pump noise level is dependent on a number of factors; the type of motor fitted, the operating capacity, pipework design and acoustic characteristics of the building. The levels specified in the table below are estimated and not guaranteed.

The dBA values are based on the noisiest ungeared electric motors that are likely to be encountered. They are Sound Pressure levels at 1 m (3.3 ft) from the directly driven pump, for "free field over a reflecting plane". For estimating L_{wA} sound power level (re 1 *pW)* add 14dBA to the sound pressure value.

If a pump unit only has been purchased, for fitting with your own driver, then the "pump only" noise levels from the table should be combined with the level for the driver obtained from the supplier. If the motor is driven by an inverter, it may show an increase in noise level at some speeds. Consult a Noise Specialist for the combined calculation.

For units driven by equipment other than electric motors or units contained within enclosures, see the accompanying information sheets and manuals.

M SLURRY pump size	Noise Level dBA (at 1 m (3 ft) reference 20 µPa)	Pump speed rpm	Sound Power Level dBA
2 M091	75	2250	89
3 M091	75	2250	89
3 M111	77	2000	91
4 M122	80	1780	94
5 M142	80	1600	94
6 M163	81	1350	95
8 M193	82	1180	96
10M234	83	1000	97
12M264	83	880	97
14M264	83	880	97
2.5M182/3M183	84	1600	98
4M223	85	1450	99
5M244	85	1180	99
6M294	86	1050	100
8M324	86	980	100
10M345	85	880	99
12M375/14M375	85	800	99
18M416	86	1180	100
20M416	86	1180	100
24M476	87	885	102

2 TRANSPORT AND STORAGE

2.1 **Consignment receipt and unpacking**
Immediately after receipt of the equipment it must be checked against the delivery/shipping documents for its completeness and that there has been no damage in transportation. Any shortage and/or damage must be reported immediately to Flowserve and received in writing within one month of receipt of the equipment. Later claims cannot be accepted.

Check any crates, boxes or wrappings for any accessories or spare parts that may be packed separately with the equipment or attached to side walls of the box or equipment.

Each product has a unique serial number. Check that this number corresponds with that advised and always quote this number in correspondence as well as when ordering spare parts or further accessories.

2.2 **Handling**
Boxes, crates, pallets or cartons may be unloaded using fork-lift vehicles or slings dependent on their size and construction.

The pump should be lifted with suitably sized and located slings. Do not use the shaft for lifting and take special care to prevent the pump from rotating in the slings due to unbalanced weight distribution.

2.3 **Lifting**
⚠ A crane must be used for all pump sets or components in excess of 25 kg (55 lb). Fully trained personnel must carry out lifting, in accordance with local regulations. The driver and pump weights are recorded on the general arrangement drawing for the specific project. The table of engineering data in section 3.5 is for bare pump only and does not include the weight of the base, driver or auxiliary equipment.

The pump unit should be lifted as shown. Do not Use the driver, bare shaft pump or component lifting points to lift the complete machine.

Before lifting the driver alone, refer to the manufacturer's instructions

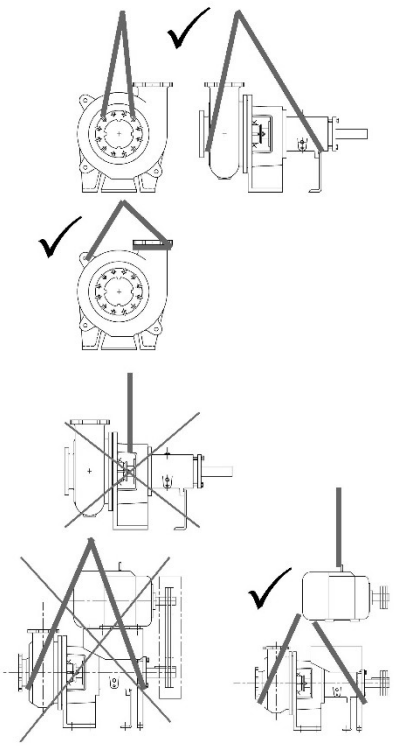

2.4 Storage

⚠ CAUTION

2.4.1 **Short-Term Storage**

When it is necessary to store a pump for a short time before it can be installed, place it in a dry, cool location. Protect it thoroughly from moisture and condensation. Protective flange covers should not be removed until the pump is being installed.

Wrap the exposed portions of the shaft and coupling to protect against sand, grit or other foreign matter. Oil lubricated units should be lubricated (refer to Section III) to protect the bearings. Grease lubricated units are lubricated at the factory during assembly. Turn the rotor over by hand at least once a week to maintain a protective film on the bearing components.

2.4.2 **LONG-TERM STORAGE**
More than precautions are required if long-term storage in excess of 90 days from factory shipment is unavoidable.

The internal surfaces of the pump should be sprayed with a rust preventative such as a water soluble oil or other suitable alternative. Particular attention should be given to the impeller, wear plate and stuffing box.

An optional method of protection is to suspend bags of desiccant material inside casing and completely seal all openings from the surrounding atmosphere. The stuffing box should be packed with clean, dry rags. Use of this method requires that the casing be initially free of liquid. The desiccant material should be checked at regular intervals to ensure that it has not absorbed excessive water vapour. A warning instruction, advising that the desiccant must be removed prior to installation should be wired to the pump.

A rust inhibitor should be added to the lubricating oil of oil lubricated units to give additional protection without destroying the lubricating properties of the oil. For specific recommendations, consult your lubrication dealer. Grease lubricated units, which can be identified by the grease fitting at each bearing location, should be well lubricated prior to placing in storage. Small amounts of additional grease should be added at regular intervals during storage. Refer to Section III for additional information related to grease lubrication.

Storage of pumps in areas of high ambient vibration should be avoided to prevent bearing damage due to brinelling. The risk of such damage can be reduced by frequent rotation of the shaft.

The pump half coupling and key should be removed from the shaft, coated with rust preventative and wrapped to prevent metal-to-metal contact. Exposed surfaces of the pump shaft should be protected with a rust preventative. All dismantled parts should be wrapped and tagged according to pump serial number and a record kept of their location.

CAUTION **Pumps covered with plastic should not be stored in a cool environment because resulting condensation can cause rusting**.

2.5 Recycling and end of product life

At the end of the service life of the product or its parts, the relevant materials and parts should be recycled or disposed of using an environmentally acceptable method and in accordance with local regulations. If the product contains substances that are harmful to the environment, these should be removed and disposed of in accordance with current local regulations. This also includes the liquids and/or gases that may be used in the "seal system" or other utilities.

Make sure that hazardous substances are disposed of safely and that the correct personal protective equipment is used. The safety specifications must be in accordance with the current local regulations at all times.

3 PUMP DESCRIPTION

3.1 Configurations

Flowserve "M Slurry" pumps are single stage, end suction centrifugal pumps specifically designed for handling abrasive slurries typical of mining and mineral process. A semi-concentric volute type casing is pedestal mounted with tangential discharge nozzle. The closed impeller with rear pump-out vanes is capable of passing solids of various sizes. Sealing is provided at the impeller to shaft fit to prevent corrosion and thereby facilitate impeller removal. The rigid three point thrust bearing housing support permits precision bearing alignment. Since the casing is pedestal mounted, back pull-out is not a normal feature.

The pump is sealed using non-asbestos packing in the stuffing box. An optional hydrodynamic seal, commonly referred to as an expeller is available and various mechanical seal designs as specified by the customer may be installed at the factory or retrofitted in the field.

All pumps are carefully inspected and prepared for shipment. All exterior machined surfaces are coated with a rust preventative compound and openings are provided with covers or plugs. Shaft packing, when required, is shipped with the pump and should not be installed until the pump is ready to run. Mechanical seals, when provided, are factory installed and adjusted prior to shipment. The axial impeller running clearance is pre-set at the factory but should be checked prior to final alignment in case of tampering.

These User Instructions also cover the MX and MS configurations, check the nameplate against the nomenclature.

3.2 Name nomenclature

The pump size will be engraved on the nameplate. The following example explains how the pump name identifies the construction features and options.

8M-193

Nominal discharge branch size.

Configuration – see below.

Nominal maximum impeller diameter.

Frame size

S is added for a recessed impeller

X is added for an expeller

C is added for dry-pit vertical close coupled

V is added for dry-pit vertical with long coupled drive shaft

3.3 Design of major parts

3.3.1 Pump casing

The pump casing is a semi-concentric volute type casing and tangential discharge nozzle. The casing is pedestal mounted therefore the discharge can be rotated to meet a number of optional orientations **(Self venting only with the discharge in the top vertical or top horizontal orientation).** On standard duty casing the suction nozzle is integral to the casing. On severe duty pumps the pump uses a removeable suction cover. The casing joints use gasketed connections.

3.3.2 Impeller

The impeller is closed design as standard but may be changed to open designs for mud, froth and viscous applications. The impeller is thread mounted to the shaft. All impellers are supplied with pump out vanes to minimise wear and reduce pressure at the stuffing box. The vanes are curved to optimize efficiency however, the “S” configuration utilizes straight radial vanes to reduce blockage. The impeller of the MS pump has larger front clearances to reduce shear and improve froth handling capabilities.

3.3.3 Shaft

The large diameter stiff shaft, mounted on bearings, has a keyed drive end. The shaft extension at the coupling is extended to cover multi-v-belt drives.

3.3.4 Pump bearings and lubrication

Ball bearings are fitted as standard and may be either oil or grease lubricated.

Oil lubrication is only available where the pump shaft is horizontal. The bearings on frame 5 and 6 pumps cannot be grease lubricated.

3.3.5 Bearing housing

For oil lubricated bearings, a bull’s eye level gauge is supplied. Constant level oilers can also be fitted. Two grease nipples enable grease lubricated bearings to be replenished between major service intervals.

3.3.6 Stuffing box housing

The stuffing box housing has a spigot (rabbet) fit between the pump casing and bearing housing for optimum concentricity. The design enables a number of sealing options to be fitted.

3.3.7 Shaft seal

The mechanical seal(s), attached to the pump shaft, seals the pumped liquid from the environment. Gland packing may be fitted as an option. The “X” model is fitted with an optional dynamic or expeller seal for certain applications.

3.3.8 Driver

The driver is normally an electric motor. Due to the hardness of the impeller the norm is to use multi-v-belts. Different drive configurations may be fitted such as internal combustion engines, turbines, hydraulic motors etc driving via couplings, belts, gearboxes, drive shafts etc.

3.3.9 Accessories

Accessories may be fitted when specified by the customer.

3.4 Performance and operating limits

This product has been selected to meet the specifications of your purchase order see section 1.5. The following data is included as additional information to help with your installation. It is typical, and factors such as temperature, materials, and seal type may influence this data. If required, a definitive statement for your particular application can be obtained from Flowserve.

3.4.1 Operating limits

Pumped liquid temperature limits	up to+121 ºC (250 ºF)
Maximum ambient temperature	up to +50 ºC (122 ºF)
Maximum pump speed	Refer to the nameplate

3.4.2 Speed torque curves

To bring a centrifugal pump up to rated speed, the driver must be capable of providing more torque at each speed than required by the pump. The margin between the available and required torque affects the time it takes the unit to reach full speed. If the torque required by the pump exceeds the torque capability of the drive at any run-up speed, the unit will not accelerate to full speed. Normally, this is not a problem with standard induction or synchronous motors provided the proper voltage is supplied at the motor.

For pumps started at shut valve conditions, 100 percent full speed torque can be calculated by using the formula:

$$\text{Torque (Nm)} = 9545 \frac{\text{Shutoff Power (kW)}}{\text{r/min}}$$

$$\text{Torque (lbfx ft)} = 5250 \frac{\text{Shutoff Power (hp)}}{\text{r/min}}$$

Torque required by the pump at any other speed during start-up can be determined from the curve above. Note that the driver manufacturer usually bases 100 percent torque on the design power of the driver and consequently the speed-torque curves should be plotted in torque units (e.g. Nm) instead of percentage torque to avoid confusion.

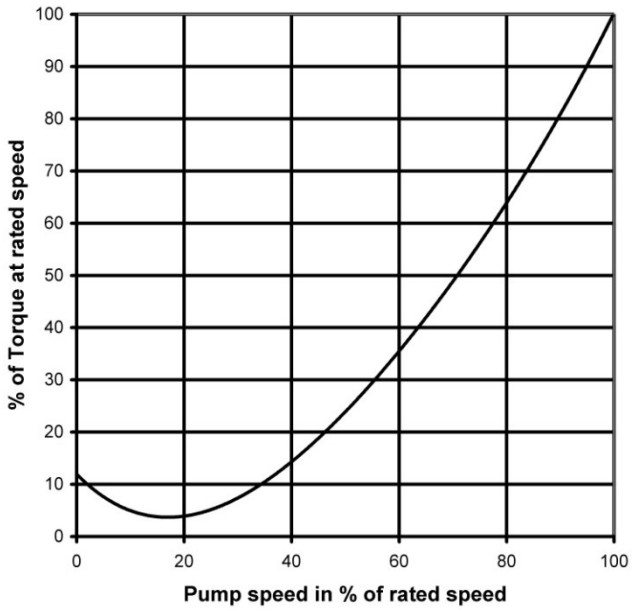

3.4.3 MAXIMUM WORKING PRESSURES -bar (psi).
Above ambient temperature these maximum pressures shall be de-rated.

CAUTION Do not conduct a hydro test on the complete pump set without the specific approval of Flowserve. While the duty requirement will have been covered, auxiliary items, flange drillings and suction pressure limits may impose a reduced static and dynamic pressure rating compared to that of the pump casing rating itself.

Note: all flanges are dimensionally compatible with ANSI 125 or 250 (Cast Iron or Ductile Iron-flat faced) or ANSI 150 or 300 (Stainless-raised face) unless otherwise stated. All flange facings on the casings are 250 rms – circular finish

MAXIMUM WORKING PRESSURE				
TEMPERATURE		STANDARD DUTY	SEVERE DUTY Frames 2,3,4 &5	SEVERE DUTY Frames 6
(ºF)	(ºC.)	Bar (PSIG.)	Bar (PSIG.)	Bar (PSIG.)
-20 TO 100	-7 TO 38	7.6 (110)	10.3 (150)	6.9 (100)
150	65	7.6 (110)	10.3 (150)	6.9 (100)
200	93	6.9 (100)	9.7 (140)	6.6 (95)
250	120	6.2 (90)	9.0 (130)	5.9 (85)

High Chrome Iron is standard for all pumps, special materials are available upon request.
Consult a Flowserve Sales Office or a Distributor for material selection and compatibility with the slurry product.

3.5 Engineering Data

MATERIALS OF CONSTRUCTION
(LIQUID END)

BASIC CONSTRUCTION	**MATERIAL CLASS**		
CASING IMPELLER WEAR PLATE	ASTM A532 CL III TYPE A		
STUFF BOX HD	ASTM A48 CL35		
SUCTION COVER	ASTM A48 CL35		
PROTECTOR PLATE	HARD STEEL –360 BHN		
IMPELLER SPACER	HARD STEEL –360 BHN		
SHAFT SLEEVE	ASTM A743 CG3M *		
SHAFT	AISI 1045		
GLAND HALVES	ASTM A743 CF8M		
PIPE PLUGS (STUFFING BOX)	C.I.		
GLAND STUDS AND NUTS	AISI 316		
WEAR PLATE STUDS & NUTS	AISI 316		
PACKING	SYNTHETIC FIBRE		
SEAL CAGE HALVES	ASTM A743 CG8M		
GASKETS-CASING	SYNTHETIC FIBRE		
GASKETS-SLEEVE	TEFLON		
O-RINGS (FRAME END)	BUNA-N (120° C MAX.)**		
MISC. FASTNERS, PARTS	STEEL		

* Nickel-Chrome-Boron Coated, except for units with mechanical seals.
** Viton will be used for all applications operating above 120°C.

TABLE OF ENGINEERING DATA
(FRAMES 1 to 3 - LIQUID END)

ENGINEERING DATA	2½M091	3M091	3M111	4M122	5M142	2.5M182	2.5M183	3M183	4M223	6M163	8M193	
PUMP DESIGN TYPE	STD	STD	STD	STD	STD	SEV	SEV	SEV	STD	STD	STD	
SUCTION SIZE mm (IN)	64 (2.5)	76 (3)	102 (4)	127 (5)	152 (6)	102 (4)	102 (4)	102 (4)	152 (6)	203 (8)	254 (10)	
DISCHARGE SIZE mm (IN)	64 (2.5)	76 (3)	76 (3)	102 (4)	127 (5)	64 (2.5)	64 (2.5)	76 (3)	102 (4)	152 (6)	203 (8)	
MAX.SPHERE SIZE mm (IN)	15 (0.6)	23 (0.9)	31 (1.2)	43 (1.7)	48 (1.9)	23 (0.9)	23 (0.9)	28 (1.1)	18 (0.7)	53 (2.1)	71 (2.8)	
WK^2 (wet) kg x m^2 lb-ft^2	.12 (2.8)	0.11 (2.6)	0.21 (4.9)	0.44 (11)	0.82 (19)	2.9 (36)	2.9 (37)	2.96 (70)	5.75 (136)	1.81 (43)	3.62 (86)	
PUMP WT. Kg (Lbs)	241 (530)	264 (580)	286 (630)	391 (860)	486 (1070)	714 (1570)	1045 (2300)	1114 (2450)	5830 (2650)	832 (1830)	1009 (2220)	
IMPELLER CLEARANCE mm (IN)	0.38 (.015)			0.76 (.030)			1.14 (.045)					
O.D.SLEEVE mm (IN)	50.80 (2.00)			76.20 (3.00)			95.25 (3.75)					
I.D.STUFFING BOX mm (IN)	69.85 (2.75)			101.6 (4.00)			127.0 (5.00)					
DEPTH OF BOX mm (IN)	71.4 (2.81)			93.5 (3.68)			116.3 (4.58)					
PACKING SIZE mm (IN)	9.5 (3/8)			12.7 (½)			15.9 (5/8)					
Recommended PACKING	L5			L5			L5					
Alternative Packing	2L3			2L3			2L3					

(1) Pumps listed "STD" are classified at "STANDARD" design, refer to sectionals - 2115242 and 2116116
(2) Pumps listed "SEV" are classified at "SEVERE DUTY" design, refer to sectional 2115243

TABLE OF ENGINEERING DATA
(FRAMES 1, 2 & 3 - FRAME DETAILS)

ENGINEERING DATA		2½M091	3M091	3M111	4M122	5M142	2.5M182	2.5M183	3M183	4M223	6M163	8M193	
SHAFT AND BEARING DATA													
DIA. AT IMPELLER	mm (in.)	28.58 (1.125)			34.93 (1.375)			50.80 (2.000)					
DIA. UNDER SLEEVE	mm (in.)	41.27 (1.625)			66.68 (2.625)			82.55 (3.250)					
DIA. BETWEEN BEARINGS	mm (in.)	63.5 (2.50)			91.9 (3.62)			91.9 (3.62)					
DIA. AT COUPLING	mm (in.)	41.27 (1.625)			63.50 (2.500)			85.72 (3.375)					
LINE BEARING		6311			6316			21320					
THRUST BEARING		7309 BUA			7314 BUA			7318 BUA					
BEARING SPAN	mm (in.)	193.8 (7.63)			279.4 (11.00)			279.4 (11.00)					
NOM. IMPELLER OVERHANG	mm (in.)	207.8 (8.18)			204.7 (8.06)			245.4 (9.66)					
B10 BEARING LIFE		MINIMUM 3 YEARS											
BEARING SEALS													
THRUST BEARING LIP SEAL		C/R 16246 NAT. 473010			C/R 24982 NAT. 417449			NAT. 417191					
LINE BEARING LIP SEAL		C / R 19832 NAT. 472492			NAT. 417350			C/R 37389 NAT. 417379					
THRUST BEARING O-RING		#250			#263			#269					
LINE BEARING O-RING		#246			#259			#267					

TABLE OF ENGINEERING DATA
(FRAME 4 - LIQUID END)

ENGINEERING DATA		5M244	6M294	8M324	10M234	12M264	14M264	
PUMP DESIGN TYPE		SEV	SEV	SEV	STD	STD	STD	
SUCTION SIZE mm (IN)		152 (6)	203 (8)	254 (10)	305 (12)	356 (14)	356 (14)	
DISCHARGE SIZE mm (IN)		127 (5)	152 (6)	203 (8)	254 (10)	305 (12)	305 (12)	
MAX.SPHERE SIZE mm (IN)		46 (1.8)	43 (1.7)	64 (2.5)	91 (3.6)	81 (3.2)	81 (3.2)	
WK^2 (wet) kg x m^2 lb-ft^2		14.2 (336)	22.7 (537)	33.1 (784)	8.83 (209)	12.6 (298)	12.6 (298)	
PUMP WT. Kg (Lbs)		1982 (4360)	2300 (5060)	2590 (5700)	1582 (3480)	2100 (4620)	2159 (4750)	
IMPELLER CLEARANCE mm (in)	1.5 (0.06)							
O.D.SLEEVE mm (IN)	120.7 (4.75)							
I.D.STUFFING BOX mm (IN)	152.4 (6.00)							
DEPTH mm (IN)	116.3 (4.58)							
PACKING SIZE mm (in)	15.9 x 15.9 (5/8 x 5/8)							
RINGS OF PACKING	5							
Recommended PACKING	L5							
Alternative Packing	2L3							

(1) Pumps listed "STD" are classified at "STANDARD" design, refer to sectionals - 2115242 and 2116116
(2) Pumps listed "SEV" are classified at "SEVERE DUTY" design, refer to sectional 2115243

TABLE OF ENGINEERING DATA
(FRAMES 4 - FRAME DETAILS)

ENGINEERING DATA			5M244	6M294	8M324	10M234	12M264	14M264		
SHAFT AND BEARING DATA										
DIA. AT IMPELLER mm (in.)	98.6 (3.88)									
DIA. UNDER SLEEVE mm (in.)	108.0 (4.250)									
DIA. BETWEEN BEARINGS mm (in.)	146.1 (5.75)									
DIA. AT COUPLING mm (in.)	104.78 (4.125)									
LINE BEARING	22226C									
THRUST BEARING	QJ322/NU322									
BEARING SPAN mm (in.)	513 (20.20)									
NOM. IMPELLER OVERHANG mm (in.)	355 (13.96)									
B10 BEARING LIFE	MINIMUM 3 YEARS									
BEARING SEALS										
THRUST BEARING LIP SEAL	NAT. 417511									
LINE BEARING LIP SEAL	C/R 42419 NAT. 416556									
THRUST BEARING O-RING	#276									
LINE BEARING O-RING	#269									

TABLE OF ENGINEERING DATA
(FRAME 5 & 6- LIQUID END)

ENGINEERING DATA			5M245	6M295	8M325	10M345	12M375	14M375	18M416	20M416	24M476	
PUMP DATA												
SUCTION DIAMETER	mm (in.)		152 (6)	203 (8)	254 (10)	305 (12)	356 (14)	406 (16)	508 (20)	508 (20)	610 (24)	
DISCHARGE DIAMETER	mm (in.)		127 (5)	152 (6)	203 (8)	254 (10)	305 (12)	356 (14)	457 (18)	508 (20)	610 (24)	
CASING	mm (in.)		20.8 (.82)	20.8 (.82)	17.5 (.69)	19.0 (.75)	20.8 (.82)	20.8 (.82)	19.0 (.75)	20.8 (.82)	17.3 (.68)	
NO. OF VANCES			4				4	4	5		5	
IMPELLER EYE AREA	cm^2 ($in.^2$)		235 (36.5)	241 (37.7)	613 (95)	729 (113)	994 (154)	994 (154)	2026 (314)	2026 (314)	3400 (527)	
MAX. SPHERE DIA.	mm (in.)		45 (1.8)	44 (1.7)	63 (2.5)	96 (3.8)	108 (4.2)	108 (4.2)	108 (4.2)	108 (4.2)	170 (6.7)	
WK^2	kg x m^2 (lb x ft^2)		10 (243)	23 (543)	33 (790)	57 (1350)	723 (1722)	84 (2000)	119 (2828)	119 (2828)	235 (5509)	
PUMP WT.	kg (lb.)		2160 (4760)	2650 (5820)	3140 (6900)	3910 (8600)	4370 (9820)	5327 (11720)	8180 (18000)	8300 (18260)	10400 (19500)	
IMPELLER AXIAL CLEARANCE	mm (in.)		1.5 (0.060)			1.7 (0.065)			1.8 (0.070)			
STUFFING BOX DATA												
O.D. SLEEVE	mm (in.)		120.65 (4.750)			158.75 (6.250)			184.15 (7.250)			
STUFFING BOX BORE	mm (in.)		101.60 (4.000)			196.9 (7.75)			222.3 (8.75)			
DEPTH OF BOX	mm (in.)		120.7 (4.75)			162.1 (6.38)			162.1 (6.38)			
PACKING SIZE	mm (in.)		15.9 X 15.9 (5 / 8 X 5 / 8)			19.1 x 19.1 (3 / 4 x 3 / 4)			19.1 x 19.1 (3 / 4 x 3 / 4)			
PACKING ARRANGEMENT	STD.		L5						L6			
	ALT.		2L3						2L4			
DISTANCE TO FIRST OBSTRUCTION	mm (in.)		106.9 (4.21)									
& B.C.D. FIRST OBSTRUCTION	mm (in.)		3/4 UNC ON 196.9 BCD 3 / 4 UNC ON 7.75 BCD									

TABLE OF ENGINEERING DATA
(FRAMES 5 & 6 - FRAME DETAILS)

ENGINEERING DATA		5M245	6M295	8M325	10M345	12M375	14M375	18M416	20M416	24M476	
SHAFT AND BEARING DATA											
DIA. AT IMPELLER	mm (in.)	3.88 (98.6)			127 (5.00)			139.7 (5.50)			
DIA. UNDER SLEEVE	mm (in.)	108.0 (4.25)			138.7 (5.46)			160.0 (6.30)			
DIA. BETWEEN BEARINGS	mm (in.)	114.3 (4.50)									
DIA. AT COUPLING	mm (in.)	73.03 (2.875)									
LINE BEARING		23228						24034HL			
THRUST BEARING-	AXIAL RADIAL	29326E 22226C						29334E 23134HL			
BEARING SPAN	mm (in.)	293.4 (11.55)									
NOM. IMPELLER OVERHANG	mm (in.)	312.2 (12.29)									
B10 BEARING LIFE		MINIMUM 3 YEARS									
BEARING SEALS											
THRUST BEARING LIP SEAL		C/R 47394 GARL.53x2837					C/R 57510 GARL.53x3275				
LINE BEARING LIP SEAL		C/R 54931 GARL. 53x3176					C/R 63700 GARL. 53x3409				
THRUST BEARING O-RING		N/A					N/A				
LINE BEARING O-RING		N/A					N/A				

4 INSTALLATION

Equipment operated in hazardous locations must comply with the relevant explosion protection regulations. See section 1.6.4, *Products used in potentially explosive atmospheres.*

Pump discharge is to stay within the top vertical or top horizontal discharge position to prevent the build-up of trapped gas. See section, *8.6 General Arrangement of Pump Discharge Orientation.*

4.1 Location

The pump should be located to allow room for access, ventilation, maintenance and inspection with ample headroom for lifting and should be as close as practicable to the supply of liquid to be pumped. Allow sufficient room to facilitate the back pull-out feature on V-belt driven units.

Refer to the general arrangement drawing for the pump set.

4.2 Part assemblies

Motors may be supplied loose on M Slurry pumps, typically on frame sizes 400 and above. It is the responsibility of the installer to ensure that the motor is assembled to the pump and lined up as detailed in section 4.5.2.

4.3 Foundation

CAUTION The foundation may consist of any material that will afford permanent, rigid support to the full area of the pump or driver supporting member. It should be of sufficient size and mass to absorb expected strains and shocks that may be encountered in service. Concrete foundations built on solid ground are desirable.

The purpose of foundation bolts is to anchor the pump unit securely to the foundation such that the foundation and pump assembly become a single structural unit. High strength steel foundation bolts (SAE Gr. 5 or equal) of the specified diameter should be located according to the elevation drawing provided. Each bolt should be surrounded by a pipe sleeve that is two or three times the diameter of the bolt. The sleeves should be securely anchored and designed to allow the bolts to be moved to conform with the holes in the baseplate. The bolts should be sufficiently long to allow for wedges or shims or levelling nuts under the baseplate, and a washer, heavy hex nut and hex jam nut for retention. Since baseplate levelling is performed after the foundation has cured, it is best to use extra long bolts that can be shortened after the installation is complete.

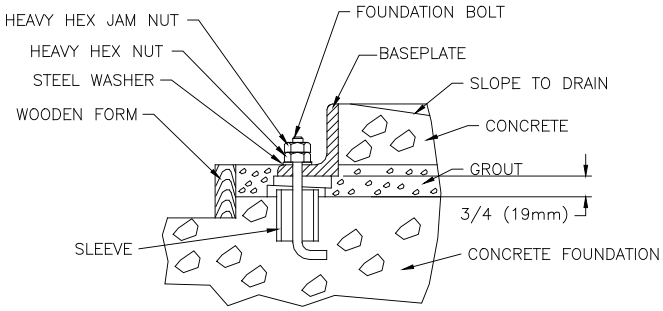

4.4 Baseplate installation

Position the baseplate and pump next to the foundation and clean the foundation surface thoroughly. Remove the rag packing from the pipe sleeves and place wedges or ships as close to the foundation bolts as possible. These may be omitted if a jacking nut on the foundation anchor bolts is preferred for levelling. Initial levelling should be within 0.75 mm (.030 inches).

Remove the flange covers and check inside the pump nozzles for cleanliness. Kerosene is recommended as the best solvent for removing factory applied rust preventative. Ensure that all traces of rust preventative are removed from the discharge and suction flange faces, the exposed shafting and all coupling surfaces. Flush the pump internals of any rust preventative applied for long-term storage.

Lift the baseplate assembly, remove the shipping skids and clean the underside of the baseplate. Position the baseplate over the foundation and lower the unit over the foundation bolts and onto the wedges, shims or jacking nuts.

With the aid of a machinist's level, adjust the wedges, shims or jacking nuts to level the pump and driver mounting pads in each direction. Check to ensure that the suction and discharge flanges are plumb, level, and at the correct elevation. It is normal practice to set the mounting pads slightly low in order to permit lowering of units which may be required to suit future piping or minor changes. Place washers over the foundation bolts and install nuts. Tighten finger tight only.

Check the impeller axial clearance and that the rotor turns freely by hand.

Note: Grout is not poured until an initial alignment of the pump and driver has been performed.

4.5 Initial alignment

4.5.1 Thermal expansion

CAUTION The pump and motor will normally have to be aligned at ambient temperature and should be corrected to allow for thermal expansion at operating temperature. In pump installations involving high liquid temperatures, the unit should be run at the actual operating temperature, shut down and the alignment checked immediately.

4.5.2 Alignment methods

DANGER Ensure pump and driver are isolated electrically and the half couplings are disconnected.

CAUTION The alignment MUST be checked. Although the pump will have been aligned at the factory it is most likely that this alignment will have been disturbed during transportation or handling. If necessary, align the motor to the pump, not the pump to the motor.

4.5.2.1 Direct Driven Units:

The importance of accurate alignment of pump and driver shafts cannot be overemphasized.

IMPROPER ALIGNMENT IS THE PRIMARY CAUSE OF VIBRATION PROBLEMS AND REDUCED BEARING LIFE.

A flexible coupling is used to compensate for slight changes in alignment that occur during normal operation and is not used to correct for installation errors. Install the pump and driver half couplings in accordance with the coupling manufacturer's instructions. Note that the coupling hub faces are not always mounted flush with the ends of the shafts. Place the driver on the baseplate such that the correct spacing is obtained between the two half couplings. In the case of electric motors, such as those with sleeve bearings, it may be necessary to run the motor to establish the rotor magnetic center. Consult the manufacturer's instruction manual for details.

The purpose of the alignment procedure is to ensure that the pump and driver shafts are in parallel and angular alignment under the normal operating conditions of load and temperature.

When the pump coupling and driver are assembled at the factory, the units are aligned prior to shipment. However, baseplates can be sprung or distorted during shipment or installation and the alignment must be checked before the unit is put in service.

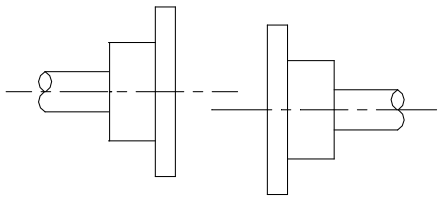

PARALLEL MISALIGNMENT– Shafts with axis parallel but not concentric

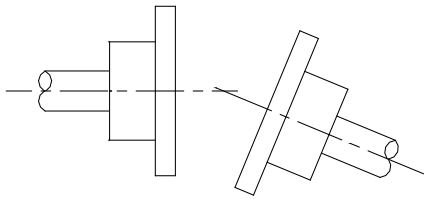

ANGULAR MISSALIGNMENT – Shafts with axis concentric but not parallel.

The coupling spacer must be removed to make this check.

For pumps and drivers that operate at different temperatures compensation must be made at the initial alignment stage (when the units are at the same temperature) to allow for thermal expansion during operation. Consult the instruction manual supplied with the driver for the manufacturer's recommendations.

Shaft alignment is greatly simplified by the use of a dial indicator with extension rods and a magnetic base. Before taking readings, ensure that the pump and driver mounting bolts are secure, and that the thrust bearing housing is properly aligned in the bearing frame or cartridge.

Parallel Alignment:

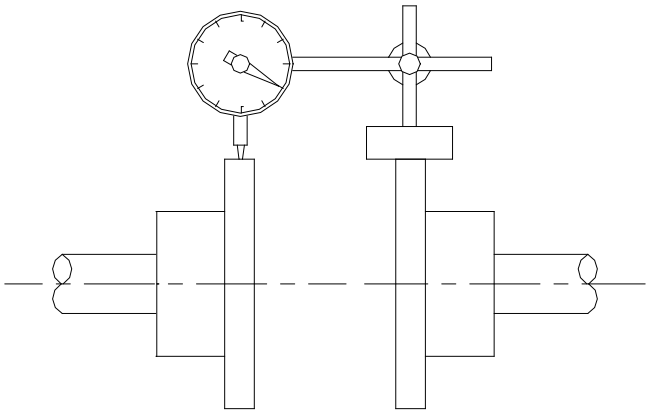

CHECKING PARALLEL MISALIGNMENT

Mount the magnetic base on the pump half coupling hub, either the face or O.D. as shown in the sketch. Place the dial indicator button on the outside diameter of the driver half coupling hub.

Note: The length of extension rods should be kept at a minimum to reduce deflection.

Rotate the pump shaft and record the dial reading at the top, bottom and each side. Correct the parallel alignment by adding or removing shims under the driver and/or moving the driver horizontally. Repeat this procedure until the maximum total indicator reading (T.I.R.) is within 0.076 mm (0.003 inch.)

Angular Alignment:
Mount the magnetic base on the pump half coupling hub, either the face or O.D. as shown in the sketch. Move the dial indicator button to indicate on the face of the driver half coupling hub as close to the outside diameter as possible. When convenient the indicator can be placed on the inside face to keep spans short. Turn both shafts 360° and record the dial readings at 90° intervals. Adjust the shims under the motor as required and repeat the procedure until the angular alignment is within 0.0005 mm (T.I.R.) per mm (0.0005 inch per inch) of maximum hub diameter.

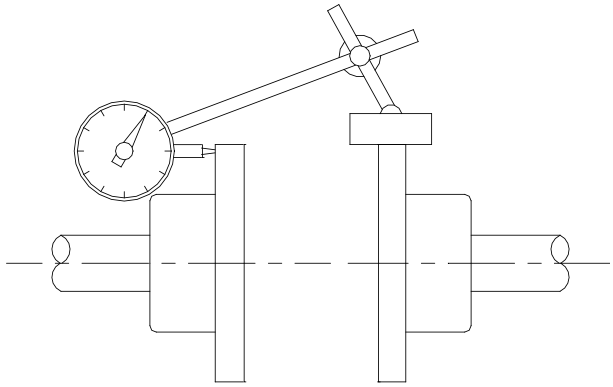

CHECKING ANGULAR MISALIGNMENT

Repeat the checks on parallel and angular alignment, ensuring the mounting bolts are secure, until the unit is properly aligned. Note that correction in one direction may affect the alignment in another direction. Re-check the gap between the coupling hubs.

If any difficulty is encountered in achieving the recommended alignment tolerances, the runout of the pump and driver shafts and each coupling hub diameter and face should be checked. Occasionally, due to practical and unavoidable manufacturing tolerance build-up associate with the pump, coupling and driver, it may be necessary to match up the two coupling hubs in the most advantageous relative angular position in order to achieve an acceptable alignment.

Do not install the coupling spacer or sleeve until grouting is complete and cured and the alignment is re-checked.

When the electric motor has sleeve bearings it is necessary to ensure that the motor is aligned to run on its magnetic centreline. A button (screwed into one of the shaft ends) is normally fitted between the motor and pump shaft ends to fix the axial position.

CAUTION If the motor does not run in its magnetic centre the resultant additional axial force may overload the pump thrust bearing.

⚠ Complete piping as below and see sections 4.7, *Final shaft alignment check* up to and including section 5, *Commissioning, start-up, operation and shutdown* before connecting driver and checking actual rotation.

4.5.2.2 **V-Belt Drive Units:**

Check that both sheaves are free of grease, rust, nicks or burrs. Install the correct size sheave on the pump shaft and locate the sheave axially to minimize overhang. Re-check the impeller axial clearance and ensure that the pump is properly secured to the baseplate. Install the driver on the adjustable base provided and install the driver sheave in line with the pump sheave. Ensure that the sheaves are tight on the shafts. With a dial indicator, check the runout on the periphery and face of each sheave to ensure that each is running true. Tighten the adjustable base and check that the driver rotation in the correct direction and that vibration levels are not unacceptable.

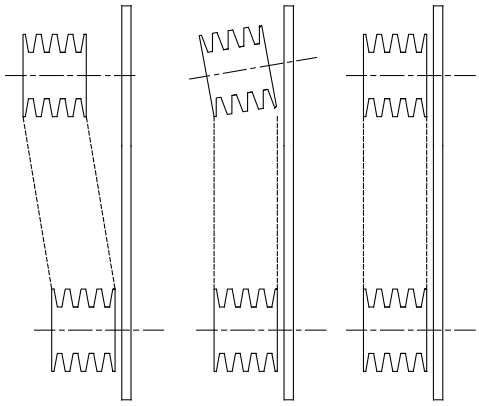

CHECKING V–BELT SHEAVE ALIGNMENT

Checking V-Belt Sheave Alignment

CAUTION Before starting the driver, refer to the manufacturer's instruction manual. The correct rotation of the pump shaft is marked on the pump casing or frame.

Check that all belts making up one drive set have matched code numbers. Loosen the adjustable base and install the belts in their proper grooves. Adjust the center distance between the sheaves to obtain proper belt tension. Check the alignment of the pump and driver sheaves with a taught string or straight edge. For proper alignment and the sheave faces must be parallel to each other and in line. Adjustments are made by slackening the belts and moving the sheaves. Retighten the drive or driver sheave then recheck. The procedure may need to be repeated to get alignment as close as possible..

When the sheaves are aligned that the shafts rotate freely by hand and install safety guard.

Belt drives must not be used in ATEX Potentially explosive environments; refer to Flowserve.

4.6 Grouting

The purpose of grouting is to provide rigid support to the pump and driver by increasing the structural rigidity of the baseplate and making it an integral mass with the foundation.

Clean the roughed foundation surface and build a wooden form around the baseplate (see Fig. 1). For initial grouting forms should be placed to isolate shims and levelling nuts. The foundation surface should be thoroughly saturated with water before grouting. A typical mixture for grouting-in a pump base is composed of one part pure Portland cement and two parts of clean building sand with sufficient water to provide the proper consistency. The grout should flow freely but not be so wet as to cause the sand and cement to separate.

Thoroughly puddle the grout while pouring to eliminate air pockets and low spots. Pour sufficient grouting to ensure that the bottom surface of the baseplate is completely submerged. Do not fill isolated areas around the shims or levelling nuts. Once the grout has set sufficiently, remove the wooden forms and finish off the sides and top as desired. At the same time, roughen the grout surface inside the baseplate. Cover with wet burlap and allow the grout to cure for at least 40 hours.

After grouting has cured, shims and levelling nuts should be removed or backed off. Tighten down baseplate to the new grout to put bolts in tension and ensure rigidity of structure. Install jam nuts and cut the bolts to the desired length. Finish grouting isolated areas. Fill the baseplate including pump and driver support pedestals with concrete. Trowel and slope the surface to give suitable drainage.

4.7 Piping

CAUTION Protective covers are fitted to the pipe connections to prevent foreign bodies entering during transportation and installation. Ensure that these covers are removed from the pump before connecting any pipes.

4.7.1 Suction and discharge pipework

In order to minimize friction losses and hydraulic noise in the pipework it is good practice to choose pipework that is one or two sizes larger than the pump suction and discharge. Typically main pipework velocities should not exceed 2 m/s (6 ft/sec) suction and 3 m/s (9 ft/sec) on the discharge.

Take into account the available NPSH which must be higher than the required NPSH of the pump.

CAUTION **Never use the pump as a support for piping.**

Maximum forces and moments allowed on the pump flanges vary with the pump size and type. To minimize these forces and moments that may, if excessive, cause misalignment, hot bearings, worn couplings, vibration and the possible failure of the pump casing, the following points should be strictly followed:

- Prevent excessive external pipe load
- Never draw piping into place by applying force to pump flange connections
- Do not mount expansion joints so that their force, due to internal pressure, acts on the pump flange

The table in 4.7.2 summarizes the maximum forces and moments allowed on M pump casings. Refer to Flowserve for other configurations.

CAUTION Ensure piping and fittings are flushed before use.

Ensure piping for hazardous liquids is arranged to allow pump flushing before removal of the pump.

4.7.2 Maximum forces and moments allowed on M Slurry pump flanges

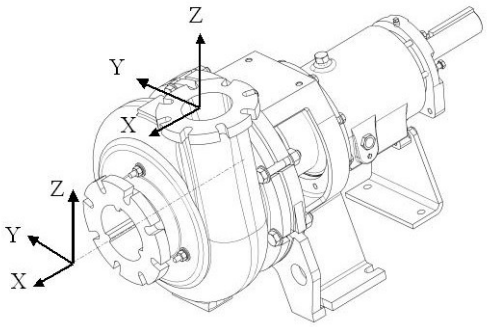

Maximum forces (F) in N (lbf) and moments (M) in Nm (lbf•ft)

Pump Size	Suction						Discharge					
	Mx	My	Mz	Fx	Fy	Fz	Mx	My	Mz	Fx	Fy	Fz
2.5M091	710 (520)	350 (260)	540 (400)	1110 (250)	890 (200)	760 (170)	710 (520)	350 (260)	540 (400)	890 (200)	760 (170)	1110 (250)
3M091	950 (700)	470 (350)	720 (530)	1070 (240)	890 (200)	1330 (300)	950 (700)	470 (350)	720 (530)	1070 (240)	890 (200)	1330 (300)
3M111	1330 (980)	680 (500)	1000 (740)	1780 (400)	1420 (320)	1160 (260)	950 (700)	470 (350)	720 (530)	1070 (240)	890 (200)	1330 (300)
4M122	1830 (1340)	940 (690)	1450 (1070)	2450 (550)	1960 (440)	1600 (360)	1330 (980)	680 (500)	1000 (740)	1420 (320)	1160 (260)	1780 (400)
5M142	2300 (1700)	1180 (870)	1760 (1300)	3110 (700)	2490 (560)	2050 (460)	1830 (1340)	940 (690)	1450 (1070)	1960 (440)	1600 (360)	2450 (550)
2.5M182/3	1330 (980)	680 (500)	1000 (740)	1780 (400)	1420 (320)	1160 (260)	710 (520)	350 (260)	540 (400)	890 (200)	760 (170)	1110 (250)
3M183	1330 (980)	680 (500)	1000 (740)	1780 (400)	1420 (320)	1160 (260)	950 (700)	470 (350)	720 (530)	1070 (240)	890 (200)	1330 (300)
4M223	2300 (1700)	1180 (870)	1760 (1300)	3110 (700)	2490 (560)	2050 (460)	1330 (980)	680 (500)	1000 (740)	1420 (320)	1160 (260)	1780 (400)
6M163	3530 (2600)	1760 (1300)	2580 (1900)	4890 (1100)	3780 (850)	3110 (700)	2300 (1700)	1180 (870)	1780 (1300)	2490 (560)	2050 (460)	3110 (700)
8M193	5020 (3700)	2440 (1800)	3800 (2800)	6670 (1500)	5340 (1200)	4450 (1000)	3530 (2600)	1760 (1300)	2580 (1900)	3780 (850)	3110 (700)	4890 (1100)
5M244/5	2300 (1700)	1180 (870)	1760 (1300)	3110 (700)	2490 (560)	2050 (460)	1830 (1340)	940 (690)	1450 (1070)	1960 (440)	1600 (360)	2450 (550)
6M294/5	3530 (2600)	1760 (1300)	2580 (1900)	4890 (1100)	3780 (850)	3110 (700)	2300 (1700)	1180 (870)	1780 (1300)	2490 (560)	2050 (460)	3110 (700)
8M324/5	5020 (3700)	2440 (1800)	3800 (2800)	6670 (1500)	5340 (1200)	4450 (1000)	3530 (2600)	1760 (1300)	2580 (1900)	3780 (850)	3110 (700)	4890 (1100)
10M234	6100 (4500)	2980 (2200)	4610 (3400)	8000 (1800)	6670 (1500)	5340 (1200)	5020 (3700)	2440 (1800)	3800 (2800)	5340 (1200)	4450 (1000)	6670 (1500)
12M264	6370 (4700)	3120 (2300)	4750 (3500)	8900 (2000)	7120 (1600)	5780 (1300)	6100 (4500)	2980 (2200)	4610 (3400)	6670 (1500)	5340 (1200)	8000 (1800)
10M345	6100 (4500)	2980 (2200)	4610 (3400)	8000 (1800)	6670 (1500)	5340 (1200)	5020 (3700)	2440 (1800)	3800 (2800)	5340 (1200)	4450 (1000)	6670 (1500)
12M375	6370 (4700)	3120 (2300)	4750 (3500)	8900 (2000)	7120 (1600)	5780 (1300)	6100 (4500)	2980 (2200)	4610 (3400)	6670 (1500)	5340 (1200)	8000 (1800)
14M375	7320 (5400)	3660 (2700)	5420 (4000)	10230 (2300)	8450 (1900)	6670 (1500)	6370 (4700)	3120 (2300)	4750 (3500)	7120 (1600)	5780 (1300)	8900 (2000)
18M416	9080 (6700)	4750 (3500)	6780 (5000)	12900 (2900)	10720 (2410)	8450 (1900)	8200 (6050)	4200 (3100)	6100 (4500)	9610 (2160)	7560 (1700)	11570 (2600)
20M416	9080 (6700)	4750 (3500)	6780 (5000)	12900 (2900)	10720 (2410)	8450 (1900)	9080 (6700)	4750 (3500)	6780 (5000)	10760 (2420)	8450 (1900)	12900 (2900)
24M476	10850 (8000)	5830 (4300)	8130 (6000)	15480 (3480)	13120 (2950)	10230 (2300)	10850 (8000)	5830 (4300)	8130 (6000)	13080 (2940)	10230 (2300)	15660 (3520)

Notes:

1) F = External force (tension or compression) M = External moment, clockwise or counter-clockwise
2) Forces and moments may be applied simultaneously in any direction
3) Values apply to all materials
4) Higher loads may be applicable, if direction and magnitude of individual loads are known, but these need written approval from Flowserve.
5) Pumps must be on rigid foundations and baseplates must be fully grouted
6) Pump/baseplate should not used as pipe anchor. Expansion joints must be properly tied
7) The pump mounting bolt torques specified must be used to prevent relative movement between the pump casing and baseplate. (See section 6.6, *Fastener torques.*) The bolt material must have a minimum yield strength of 600 N/mm^2 (87 000 lb/in.^{2})

4.7.2 Suction piping

a) The inlet pipe should be one or two sizes larger than the pump inlet bore and pipe bends should be as large a radius as possible.
b) Pipework reducers should have a maximum total angle of divergence of 15 degrees.
c) On suction lift the piping should be inclined up towards the pump inlet with eccentric reducers incorporated to prevent air locks.
d) On positive suction, the inlet piping must have a constant fall towards the pump.
e) Flow should enter the pump suction with uniform flow, to minimize noise and wear. This is particularly important on large or high-speed pumps which should have a minimum of four diameters of straight pipe on the pump suction between the elbow and inlet flange. See section 10.3, *Reference 1* for more detail.
f) Inlet strainers, when used, should have a net `free area' of at least three times the inlet pipe area.
g) Do not install elbows at an angle other than perpendicular to the shaft axis. Elbows parallel to the shaft axis will cause uneven flow.
h) Except in unusual circumstances strainers are not recommended in inlet piping. If considerable foreign matter is expected a screen installed at the entrance to the wet well is preferable.
i) Fitting an isolation valve will allow easier maintenance.
j) Never throttle pump on suction side and never place a valve directly on the pump inlet nozzle.

4.7.3 Discharge piping

A non-return valve should be located in the discharge pipework to protect the pump from excessive back pressure and hence reverse rotation when the unit is stopped.

Pipework reducers should have a maximum total angle of divergence of 15 degrees. Fitting an isolation valve will allow easier maintenance.

4.7.4 Auxiliary piping

4.7.4.1 Drains

Pipe pump casing drains and gland leakage to a convenient disposal point.

4.7.4.2 Pumps fitted with gland packing

When suction pressure is below ambient pressure it is necessary to feed the gland packing with liquid to provide lubrication and prevent the ingress of air. This is normally achieved with a supply from the pump discharge volute to the stuffing box. A control valve is fitted in the line to enable the pressure to the gland to be controlled.

If the pumped liquid is dirty and cannot be used for sealing, a separate clean compatible liquid supply to the gland at 1 bar (15 psi) above suction pressure is recommended.

4.7.4.3 Pumps fitted with mechanical seals

Single seals requiring re-circulation will normally be provided with the auxiliary piping from pump casing already fitted.

If the seal requires an auxiliary quench then a connection must be made to a suitable source of liquid flow, low pressure steam or static pressure from a header tank. Recommended pressure is 0.35 bar (5 psi) or less. Check *General arrangement drawing*.

Special seals may require different auxiliary piping to that described above. Consult separate User Instructions and/or Flowserve if unsure of correct method or arrangement.

For pumping hot liquids, to avoid seal damage, it is recommended that any external flush/cooling supply be continued after stopping the pump.

4.7.5 Final checks

Check the tightness of all bolts in the suction and discharge pipework. Check also the tightness of all foundation bolts.

4.8 Final shaft alignment check

After connecting piping to the pump, rotate the shaft several times by hand to ensure there is no binding and all parts are free.

Recheck the coupling alignment, as previously described, to ensure no pipe strain. If pipe strain exists, correct piping.

4.9 Electrical connections

4.9.1 DANGER Electrical connections must be made by a qualified electrician in accordance with relevant local, national and international regulations.

4.9.2 It is important to be aware of the EUROPEAN DIRECTIVE on potentially explosive areas where compliance with IEC60079-14 is an additional requirement for making electrical connections.

4.9.3 It is important to be aware of the EUROPEAN DIRECTIVE on electromagnetic

compatibility when wiring up and installing equipment on site. Attention must be paid to ensure that the techniques used during wiring/installation do not increase electromagnetic emissions or decrease the electromagnetic immunity of the equipment, wiring or any connected devices. If in any doubt, contact Flowserve for advice.

4.9.4 DANGER The motor must be wired up in accordance with the motor manufacturer's instructions (normally supplied within the terminal box) including any temperature, earth leakage, current and other protective devices as appropriate. The identification nameplate should be checked to ensure the power supply is appropriate.

4.9.5 A device to provide emergency stopping must be fitted.
4.9.6 If not supplied pre-wired to the pump unit, the controller/starter electrical details will also be supplied within the controller/starter.
4.8.7 For electrical details on pump sets with controllers see the separate wiring diagram.
4.8.8 CAUTION See section 5.3, *Direction of rotation* before connecting the motor to the electrical supply.

4.10 Protection systems

Ex The following protection systems are recommended particularly if the pump is installed in a potentially explosive area or is handling a hazardous liquid. If in doubt consult Flowserve.

If there is any possibility of the system allowing the pump to run against a closed valve or below minimum continuous safe flow a protection device should be installed to ensure the temperature of the liquid does not rise to an unsafe level.

If there are any circumstances in which the system can allow the pump to run dry, or start up empty, a power monitor should be fitted to stop the pump or prevent it from being started. This is particularly relevant if the pump is handling a flammable liquid.

If leakage of product from the pump or its associated sealing system can cause a hazard it is recommended that an appropriate leakage detection system is installed.

To prevent excessive surface temperatures at bearings it is recommended that temperature or vibration monitoring are carried out. See sections 5.7.4 and 5.7.5.

5 COMMISSIONING, START-UP, OPERATION AND SHUTDOWN

CAUTION ***These operations must be carried out by fully qualified personnel.***

5.1 Lubrication Methods

Determine the mode of lubrication of the pump set, eg grease, oil, product lubrication etc.

CAUTION For oil bath lubricated pumps, fill the bearing housing with correct grade of oil to the correct level; validate by sight glass or constant level oiler bottle.

5.1.1 Oil Bath Lubrication

When fitted with a constant level oiler, the bearing housing should be filled by unscrewing or hinging back the transparent bottle and filling the bottle with oil. Where an adjustable body Trico oiler is fitted this should be set to the proper height.

The oil filled bottle should then be refitted so as to return it to the upright position. Filling should be repeated until oil remains visible within the bottle.

Approximate oil volumes are shown in section 5.2.3, *Recommended Fill Capacities*.

5.1.2 Grease Lubrication

Grease lubricated pumps and electric motors are supplied pre-greased.

5.1.3 Oil Mist Lubrication

FRBH pumps may be lubricated by pure or purge oil mist. See comments below.

5.1.3.1 Purge Mist

In the case of purge mist an oil level is maintained in the bearing frame. No changes are required to be made to the pump, however, the oil level must be maintained at site glass center. Excess oil must be removed. Oil is injected outboard of each bearing.

5.1.3.2 Pure Oil Mist

In this method all oil is drained from the oil sump, this is sometimes referred to as a dry sump. Oil is injected outboard at each bearing. To use this method some modifications must be made to the pump. If pumps are shipped for standard oil or grease lubrication the pumps must be dismantled and reworked. All oil return grooves that permit movement of oil from outboard of each bearing back to the sump must be blocked. These passages may be blocked using epoxy filler or other compounds compatible with the mist oil. Pressure inside the center of the bearing frame must be controlled to 25mm (1") H_2O or less. Pressures greater than this may result in excessive venting of oil through outboard seals and could result in bearing failure as mist is not forced through the bearing. It is recommended that mist system operate for 24 hrs before starting of the pump to ensure bearing surfaces have been properly misted. Testing completed has used an oil viscosity of 100 Cst. For additional information refer to TR-3326, Pure Oil Mist lubrication of FRBH and R/M Slurry Pumps. Thrust bearings on frame 4 pumps to be changed to angular contact ball Bearings. Oil mist not recommended for frame 5&6 pumps.

5.2 Pump lubricants

5.2.1 Recommended oil lubricants

	Oil	Splash lubrication		Force feed lubrication
Centifugal pump lubrication	Viscosity mm ²/s 40 ºC	32	68	46
	Temp. maximum ºC (ºF)	65 (149)	80 (176)	-
	Designation according to DIN51502 ISO VG	HL/HLP 32	HL/HLP 68	HL/HLP 46
Oil companies and lubricants	**BP**	BP Energol HL32 BP Energol HLP32	BP Energol HL68 BP Energol HLP68	BP Energol HL46 BP Energol HLP46
	DEA	Anstron HL32 Anstron HLP32	Anstron HL68 Anstron HLP68	Anstron HL46 Anstron HLP46
	Elf	OLNA 32 HYDRELEF 32 TURBELF 32 ELFOLNA DS32	TURBELF SA68 ELFOLNA DS68	TURBELF SA46 ELFOLNA DS46
	Esso	TERESSO 32 NUTO H32	TERESSO 68 NUTO H68	TERESSO 46 NUTO H46
	Mobil	Mobil DTE oil light Mobil DTE13 MobilDTE24	Mobil DTE oil heavy medium Mobil DTE26	Mobil DTE oil medium Mobil DTE15M Mobil DTE25
	Q8	Q8 Verdi 32 Q8 Haydn 32	Q8 Verdi 68 Q8 Haydn 68	Q8 Verdi 46 Q8 Haydn 46
	Shell	Shell Tellus 32 Shell Tellus 37	Shell Tellus 01 C 68 Shell Tellus 01 68	Shell Tellus 01 C 46 Shell Tellus 01 46
	Texaco	Rando Oil HD 32 Rando Oil HD-AZ-32	Rando Oil 68 Rando Oil HD C-68	Rando Oil 46 Rando Oil HD B-46
	Wintershall (BASF Group)	Wiolan HN32 Wiolan HS32	Wiolan HN68 Wiolan HS68	Wiolan HN46 Wiolan HS46

5.2.2 Recommended grease lubricants

Grease	Grease nipples	
	NLGI 2 *	**NLGI 3 ****
Temp. range ºC (ºF)	-20 to +100 (-4 to +212)	-20 to +100 (-4 to +212)
Designation according to DIN	K2K-20	K2K 30
BP	Energrease LS2	Energrease LS3
DEA	Glissando 20	Glissando 30
Elf	Elfmulti 2	Elfmulti 3
Esso	Beacon 2	Beacon 3
Mobil	Mobilux 2	Mobilux 3
Q8	Rembrandt 2	Rembrandt 3
Shell	Alvania Fett G2 Alvania Fett R2	Alvania R3
Texaco	Multilak 20 Multilak EP2	Multilak 30 Multilak EP3
Wintershall (BASF Group)	Wiolub LFK 2	-
SKF	LGMT 2	LGMT 3
Silkolene	G55/T	G56/T

* NLGI 2 is an alternative grease and is not to be mixed with other grades

** Factory packed bearings for the temperature range with grease nipples

5.2.3 Recommended fill quantities

TABLE 5.2.3 OIL AND GREASE QUANTIES

BEARING FRAME SIZE NO.	*OIL SUMP CAPACITY*		INITIAL GREASE CAPACITIES					
			THRUST BEARING			LINE BEARING		
	U.S. GAL.	LITRES	OZ.	CU. IN.	CU. CM.	OZ.	CU. IN.	CU. CM.
1	0.4	1.5	6	7.3	120	15	18.3	300
2	0.9	3.5	18	22.0	361	37	45.1	839
3	1.3	5.0	34	41.5	680	70	85.4	1400
4	1.5	6.0	36	56.1	917	93	113.4	1859
5	4.0	15.0	Not applicable for these frame sizes					
6	5.0	19.0						

5.2.4 CAUTION Lubrication schedule

5.2.4.1 Oil lubricated bearings

Normal oil change intervals are 4 000 operating hours or at least every 6 months. For pumps on hot service or in severely damp or corrosive atmosphere, the oil will require changing more frequently. Lubricant and bearing temperature analysis can be useful in optimizing lubricant change intervals.

The lubricating oil should be a high quality mineral oil having foam inhibitors. Synthetic oils may also be used if checks show that the rubber oil seals will not be adversely affected.

The bearing temperature may be allowed to rise to 50 ºC (122 ºF).above ambient, but should not exceed 82 ºC (180 ºF). A continuously rising temperature, or an abrupt rise, indicate a fault.

5.2.4.2 Grease lubricated bearings

When grease nipples are fitted, one charge between grease changes is advisable for most operating conditions, ie 2 000 hours interval. . See 6.2.3.1 for additional information.

Normal intervals between grease changes are 4 000 hours or at least every 6 months.
The characteristics of the installation and severity of service will determine the frequency of lubrication. Lubricant and bearing temperature analysis can be useful in optimising lubricant change intervals.

The bearing temperature may be allowed to rise to 55 ºC (131 ºF) above ambient but should not exceed 95 °C (204 °F). For most operating conditions a quality grease having a lithium soap base and NLGI consistency of No 2 or No 3 is recommended. The drop point should exceed 175 ºC (350 ºF).

CAUTION Never mix greases containing different bases, thickeners or additives.

5.3 Direction of rotation

CAUTION Ensure the pump is given the same rotation as the pump direction arrow cast on the pump casing. Rotation is clockwise when the pump is viewed from the driver.

To avoid dry running the pump must either be filled with liquid or have the flexible coupling disconnected before driver is switched on.

CAUTION If maintenance work has been carried out to the site's electricity supply, the direction of rotation should be re-checked as above in case the supply phasing has been altered.

5.4 Guarding

Guarding is supplied fitted to the pump set. Fasteners for guards must remain captive in the guard to comply with the Machinery Directive 2006/42/EC. When releasing guards, the fasteners must be unscrewed in an appropriate way to ensure that the fasteners remain captive. Whenever guarding is removed or disturbed ensure that all the protective guards are securely refitted prior to start-up.

5.5 Priming and auxiliary supplies

CAUTION Ensure all electrical, hydraulic, pneumatic, sealant and lubrication systems (as applicable) are connected and operational.

CAUTION Ensure the inlet pipe and pump casing are completely full of liquid before starting continuous duty operation.

5.5.1 Suction pressure above atmospheric pressure

Horizontal pumps: Open suction line to pump, open vent connection in discharge pipe above pump to allow air to escape.

Vertical pumps: open vent connection in discharge pipe at top plate and allow air to vent from pump casing and discharge piping.

5.5.2 Suction lift with foot valve fitted

Fill suction pipe and casing with liquid at a pressure of 1 to 2 bar from an external source. Vent as described in section 5.5.1.

5.5.3 Suction lift without foot valve

Pump casing vents on the suction volute must be connected to an external vacuum pump priming system. If in doubt please consult Flowserve.

5.6 Starting the pump

a) CAUTION Ensure flushing and/or cooling/ heating liquid supplies are turned ON before starting the pump.
b) CLOSE the outlet valve.
c) OPEN all inlet valves.
d) Prime the pump.
e) Ensure all vent connections are closed before starting.
f) Start motor and check outlet pressure.
g) If the pressure is satisfactory, slowly OPEN outlet control valve.
h) CAUTION Do not run the pump with the outlet valve closed for a period longer than 30 seconds.
i) If NO pressure, or LOW pressure, STOP the pump. Refer to section 7, *Faults; causes and remedies*, for fault diagnosis.

5.7 Operating the pump

5.7.1 Venting the pump

Vent the pump to enable all trapped air to escape taking due care with hot or hazardous liquids.

Under normal operating conditions, after the pump has been fully primed and vented, it should be unnecessary to re-vent the pump.

5.7.2 Pumps fitted with packed gland

If the pump has a packed gland there must be some leakage from the gland. Gland nuts should initially be finger-tight only. Leakage should take place soon after the stuffing box is pressurised.

The gland must be adjusted evenly to give visible leakage and concentric alignment of the stuffing box to avoid excess temperature. If no leakage takes place the packing will begin to overheat. If overheating takes place the pump should be stopped and allowed to cool before being re-started. Loosen the gland. When the pump is re-started, check to ensure leakage is taking place at the packed gland.

If hot liquids are being pumped it may be necessary to slacken the gland nuts to achieve leakage.

The pump should be run for 30 minutes with steady leakage and the gland nuts tightened by 10 degrees at a time until leakage is reduced to an acceptable level, normally a minimum of 120 drops per minute is required. Bedding in of the packing may take another 30 minutes.

Care must be taken when adjusting the gland on an operating pump. Use appropriate PPE. Loose clothing must not be worn to avoid being caught up by the pump shaft. Shaft guards must be replaced after the gland adjustment is complete.

CAUTION Never run gland packing dry, even for a short time.

5.7.3 Pumps fitted with mechanical seal

Mechanical seals require no adjustment. Any slight initial leakage will stop when the seal is run in.

Before pumping dirty liquids it is advisable, if possible, to run in the pump mechanical seal using clean liquid to safeguard the seal face.

CAUTION External flush or quench should be started before the pump is run and allowed to flow for a period after the pump has stopped.

CAUTION Never run a mechanical seal dry, even for a short time.

5.7.4 Bearings

If the pumps are working in a potentially explosive atmosphere temperature or vibration monitoring at the bearings is recommended

If bearing temperatures are to be monitored it is essential that a benchmark temperature is recorded at the commissioning stage and after the bearing temperature has stabilized. Record the bearing

temperature (t) and the ambient temperature (ta). Estimate the likely maximum ambient temperature (tb). Set the alarm at (t+tb-ta+5)°C [(t+tb-ta+10)°F] and the trip at 100 °C (212 °F) for oil lubrication and 105 °C (220 °F) for grease lubrication.

It is important, particularly with grease lubrication, to keep a check on bearing temperatures. After start up the temperature rise should be gradual, reaching a maximum after approximately 1.5 to 2 hours. This temperature rise should then remain constant or marginally reduce with time. Refer to section 6.2.3.1 for further information.

5.7.5 Normal vibration levels, alarm and trip

For guidance, pumps generally fall under a classification for rigid support machines within the International rotating machinery standards and the recommended maximum levels below are based on those standards.

CAUTION Alarm and trip values for installed pumps should be based on the actual measurements (N) taken on the pump in the fully commissioned as new condition. Measuring vibration at regular intervals will then show any deterioration in pump or system operating conditions.

Vibration velocity – unfiltered **mm/s (in./s) r.m.s.**		**M & MX**
Normal	**N**	≤ 7.6 (0.30)
Alarm	**N** x 1.25	≤ 9.5 (0.37)
Shutdown trip	**N** x 2.0	≤ 15.2 (0.60)

5.7.6 Stop/start frequency

Pump sets are normally suitable for the number of equally spaced stop/starts per hour shown in the table below. Check actual capability of the driver and control/starting system before commissioning.

Motor rating kW (hp)	**Maximum stop/starts per hour**
Up to 15 (20)	15
Between 15 (20) and 90 (120)	10
Above 90 (120)	6

Where duty and standby pumps are installed, it is recommended that they are run alternately every week.

5.8 Stopping and shutdown

a) CAUTION Close the outlet valve, but ensure that the pump runs in this condition for no more than a few seconds.

b) Stop the pump.

c) Switch off flushing and/or cooling/heating liquid supplies at a time appropriate to the process.

d) CAUTION For prolonged shut-downs, especially when ambient temperatures are likely to drop below freezing point, the pump and any cooling and flushing arrangements must be drained or otherwise protected.

5.9 Hydraulic, mechanical and electrical duty

This product has been supplied to meet the performance specifications of your purchase order, however it is understood that during the life of the product these may change. The following notes may help the user decide how to evaluate the implications of any change. If in doubt contact your nearest Flowserve office.

5.9.1 Specific gravity (SG)

Pump capacity and total head in metres (feet) do not change with SG, however pressure displayed on a pressure gauge is directly proportional to SG. Power absorbed is also directly proportional to SG. It is therefore important to check that any change in SG will not overload the pump driver or over-pressurize the pump.

5.9.2 Viscosity

For a given flow rate the total head reduces with increased viscosity and increases with reduced viscosity. Also for a given flow rate the power absorbed increases with increased viscosity, and reduces with reduced viscosity. It is important that checks are made with your nearest Flowserve office if changes in viscosity are planned.

5.9.3 Pump speed

Changing pump speed effects flow, total head, power absorbed, $NPSH_R$, noise and vibration. Flow varies in direct proportion to pump speed, head varies as speed ratio squared and power varies as speed ratio cubed. The new duty, however, will also be dependent on the system curve. If increasing the speed, it is important therefore to ensure the maximum pump working pressure is not exceeded, the driver is not overloaded, $NPSH_A > NPSH_R$, and that noise and vibration are within local requirements and regulations.

5.9.4 Net positive suction head ($NPSH_A$)

NPSH available ($NPSH_A$) is a measure of the head available in the pumped liquid, above its vapour pressure, at the pump suction branch.

NPSH required ($NPSH_R$) is a measure of the head required in the pumped liquid, above its vapour pressure, to prevent the pump from cavitating. It is important that $NPSH_A > NPSH_R$. The margin between $NPSH_A > NPSH_R$ should be as large as possible.

If any change in $NPSH_A$ is proposed, ensure these margins are not significantly eroded. Refer to the pump performance curve to determine exact requirements particularly if flow has changed. If in doubt please consult your nearest Flowserve office for advice and details of the minimum allowable margin for your application.

5.9.5 Pumped flow
Flow must not fall outside the minimum and maximum continuous safe flow shown on the pump performance curve and/or data sheet.

5.9.6 **Drive Efficiency**
Various drive systems have efficiencies that may not be accounted for. Motor efficiencies are commonly known and accounted for in the motor selection. The use of VFD (variable frequency drives), MVD (multi-V belt drives) and gearboxes however should be considered. In VFD's the motor rating is based on full RPM and output power will be reduced proportionally with speed changes. Consult Flowserve Engineering for further information.

6 MAINTENANCE

6.1 **General**
⚠ It is the plant operator's responsibility to ensure that all maintenance, inspection and assembly work is carried out by authorized and qualified personnel who have adequately familiarized themselves with the subject matter by studying this manual in detail. (See also section 1.6.2.)

Any work on the machine must be performed when it is at a standstill. It is imperative that the procedure for shutting down the machine is followed, as described in section 5.8.

On completion of work all guards and safety devices must be re-installed and made operative again.

Before restarting the machine, the relevant instructions listed in section 5, *Commissioning, start up, operation and shut down* must be observed.

Oil and grease leaks may make the ground slippery. Machine maintenance must always begin and finish by cleaning the ground and the exterior of the machine.

If platforms, stairs and guard rails are required for maintenance, they must be placed for easy access to areas where maintenance and inspection are to be carried out. The positioning of these accessories must not limit access or hinder the lifting of the part to be serviced.

When air or compressed inert gas is used in the maintenance process, the operator and anyone in the vicinity must be careful and have the appropriate protection.

Do not spray air or compressed inert gas on skin.

Do not direct an air or gas jet towards other people.

Never use air or compressed inert gas to clean clothes.

Before working on the pump, take measures to prevent an uncontrolled start. Put a warning board on the starting device with the words:
"Machine under repair: do not start".

With electric drive equipment, lock the main switch open and withdraw any fuses. Put a warning board on the fuse box or main switch with the words:
"Machine under repair: do not connect".

Never clean equipment with inflammable solvents or carbon tetrachloride. Protect yourself against toxic fumes when using cleaning agents.

6.2 **Maintenance schedule**
Ex It is recommended that a maintenance plan and schedule is adopted, in line with these User Instructions, to include the following:

a) Any auxiliary systems installed must be monitored, if necessary, to ensure they function correctly.
b) Gland packings must be adjusted correctly to give visible leakage and concentric alignment of the gland follower to prevent excessive temperature of the packing or follower.
c) Check for any leaks from gaskets and seals. The correct functioning of the shaft seal must be checked regularly.
d) Check bearing lubricant level, and if the hours run show a lubricant change is required.
e) Check that the duty condition is in the safe operating range for the pump.

f) Check vibration, noise level and surface temperature at the bearings to confirm satisfactory operation.
g) Check dirt and dust is removed from areas around close clearances, bearing housings and motors.
h) Check coupling alignment and re-align if necessary.

Our specialist service personnel can help with preventative maintenance records and provide condition monitoring for temperature and vibration to identify the onset of potential problems.

If any problems are found the following sequence of actions should take place:
a) Refer to section 7, *Faults; causes and remedies*, for fault diagnosis.
b) Ensure equipment complies with the recommendations in this manual.
c) Contact Flowserve if the problem persists.

6.2.1 Routine inspection (daily/weekly)

CAUTION The following checks should be made and the appropriate action taken to remedy any deviations:
a) Check operating behaviour. Ensure noise, vibration and bearing temperatures are normal.
b) Check that there are no abnormal fluid or lubricant leaks (static and dynamic seals) and that any sealant systems (if fitted) are full and operating normally.
c) Check that shaft seal leaks are within acceptable limits.
d) Check the level and condition of oil lubricant. On grease lubricated pumps, check running hours since last recharge of grease or complete grease change.
e) Check any auxiliary supplies such as heating/cooling (if fitted) are functioning correctly.

Refer to the manuals of any associated equipment for routine checks needed.

6.2.2 Periodic inspection (six monthly)

a) CAUTION Check foundation bolts for security of attachment and corrosion.
b) Check pump running records for hourly usage to determine if bearing lubricant requires changing.
c) The coupling should be checked for correct alignment and worn driving elements.

Refer to the manuals of any associated equipment for periodic checks needed.

6.2.3 Re-lubrication

Lubricant and bearing temperature analysis can be useful in optimizing lubricant change intervals. In general however, the following is recommended.

6.2.3.1 *Grease lubrication*

CAUTION See section 5.2.2 for grease recommendations.

Re-greasing quantities for each bearing are contained in the table below. Please note that standard pumps are oil lubricated. Grease only when factory installed grease fittings are supplied.
Regrease - via grease nipples every 2 000 hours or sooner depending on the severity of the application.

It is important not to under or over grease the bearings as this will lead to overheating and premature failure.

a) Grease lubricated bearing housings have grease nipples fitted in the bearing covers.
b) Move the axial seal ring back so the gap between the pump shaft and bearing cover can be seen.
c) Connect grease gun to the nipple.
d) Press grease into the bearing housing until the first signs of it appear in the gap between the housing and shaft, then stop greasing.
e) V-rings should be seated at the proper distance from the sealing surface to avoid overheating.

Table 6.2.3.1 Bearing Regreasing Quantities

BRG.	THRUST BEARING			LINE BEARING		
FRAME SIZE	OZ.	CU. IN.	CU. CM.	OZ.	CU. IN.	CU. CM.
1	1	1.2	20	3	3.6	60
2	3	3.6	60	7	8.5	140
3	7	8.5	140	14	17.1	280
4	9	11.0	180	18	22	361

Note: Frame 5 & 6 pumps cannot be greased

f) The maximum allowable operating temperatures for anti friction bearings will vary from unit to unit, depending on ambient and fluid temperature. The rise above ambient should not normally exceed 55 °C (131 °F) or a combined maximum of 95 °C (204 °F).
g) A continuously rising temperature or an abrupt temperature rise indicates a problem. If these symptoms occur, stop the pump immediately and investigate the cause.

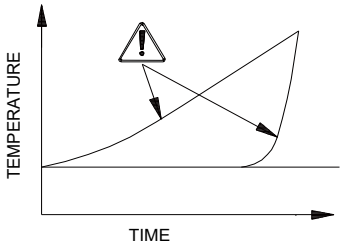

Grease change - every 4 000 hours or sooner depending on the severity of the application.
a) Remove the bearing housing from the rotor assembly.
b) Brush the bearing housing with hot kerosene (100 to 115 °C/212 to 240 °F) or other non-toxic solvent.
c) Clean and flush out the housing with a light mineral oil.
d) Do not use waste oil to clean the housing.

To clean the bearings:
a) Wipe off as much grease as possible with a clean lint-free cloth.
b) Brush bearings with hot kerosene (80 to 90 °C/ 175 to 195 °F) while gently spinning the outer bearing ring.
c) Spin each ball to ensure that it is clean.

To remove badly oxidized grease which refuses to come off:
a) Support the rotor in a vertical position and immerse the bearing in hot kerosene or a mixture of alcohol and light mineral solvent.
b) Gently spin the bearing outer ring.
c) Dry and re-flush the bearing with clean light oil.
d) It is important not to under or over grease the bearings as this will lead to overheating and premature failure. It is recommended that the bearings be filled with grease using a suitable spatula. In addition the housings should be no more than half filled.

6.2.3.2 Oil lubrication

CAUTION Maintaining the correct oil level is very important.

If the pump is supplied with a constant level oiler the oil level will be automatically maintained and as long as oil is visible in the glass bottle there is no need to refill. If however a sight glass has been fitted then regular checks should be made to ensure the level is maintained at the centre of the glass window.

Refer to section 5.1.1 for methods of oil fill, section 5.2.1 for oil grade recommendations and 5.2.4 for the schedule and temperature limits.

6.2.4 **Mechanical seals**

No adjustment is possible. When leakage reaches an unacceptable level the seal will need replacement.

6.2.5 **Gland packing**

6.2.5.1 Water Lubricated Packing: The stuffing box split gland can be completely removed for re-packing or to enable the addition of extra rings of packing.

The stuffing box is normally supplied with a lantern ring to enable a clean or pressurised flush to the centre of the packing. If not required, this can be replaced by an extra 2 rings of packing.

There must always be a small leakage, normally a minimum of 120 drops per minute to atmosphere to lubricate and cool the packing is required. The stuffing box is provided with 4 lantern ring connections (2 inlet, 2 drain), The packing may be arranged in one of two ways (See Fig. 6).

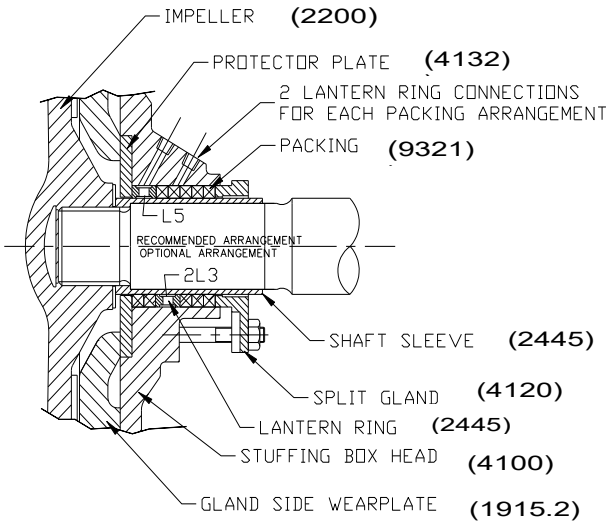

FIG.6 STUFFING BOX ARRANGEMENT

The recommended arrangement (L5) is preferred to constantly flush the slurry away from the sleeve and packing. Generally a flow rate of 2 GPM per inch of sleeve diameter will be sufficient to flush and lubricate the stuffing box area. The sight condition will dictate the actual flow rate required.

To reduce dilution of process liquid or the quantity of seal water, the optional arrangement (2L3) may be used.

The pressure of the flushing water may be calculated using a simplified approach as follows:

where y=0.6 for standard duty M pumps and Y=0.8 for severe duty M pumps (refer to Engineering Data Table, section 3.5.
In most cases the pressure should be based on a shut off condition. The actual pressure at the stuffing box depends on several factors such as: size and condition of the impeller, speed of pump, duty flow and clearances. A pump operating towards shut valve will have higher stuffing box pressures than what can be factored TDH increase.

6.2.5.2 Expeller Packing
For the expeller gland option, the expeller seals the stuffing box during operation and the packing seals when the pump is shut down. To lubricate the packing grease must be injected. For this reason the stuffing box is fitted with a standard grease nipple. The stuffing box should be packed with 2 rings at the bottom of the box followed by split lantern rings and 1 ring of packing. Details for packing installation described previously for the water-

supply pressure =Y x TDH/2.31 x SG + Suction pressure + 5 psi

flushed gland also applies.

The packing and lantern rings are not installed into the stuffing box at the factory.

TABLE 6.2.5.2 - Expeller Greasing

FRAME NO.	INITIAL			REGREASING		
	OZ.	CU. IN.	CU. CM.	OZ.	CU. IN.	CU. CM.
1	0.8	1.0	16	0.2	0.3	4
2	1.3	1.5	26	0.4	0.5	8
3	2.9	3.5	58	0.6	0.8	12
4	3.7	4.5	74	0.8	1.0	16

6.3 Spare parts

6.3.1 Ordering of spares
Flowserve keep records of all pumps that have been supplied. When ordering spares the following information should be quoted:

1) Pump serial number
2) Pump size
3) Part name – taken from section 8
4) Part number – taken from section 8
5) Number of parts required

The pump size and serial number are shown on the pump nameplate.

To ensure continued satisfactory operation, replacement parts to the original design specification should be obtained from Flowserve.
Any change to the original design specification (modification or use of a non-standard part) will invalidate the pump's safety certification.

6.3.2 Storage of spares
Spares should be stored in a clean dry area away from vibration. Inspection and re-treatment of metallic surfaces (if necessary) with preservative is recommended at 6 monthly intervals.

6.4 Recommended spares and consumable items

For start up purposes:
1 - complete set of gland packing
2 - shaft sleeves
1 - set of gaskets and seals
(optional: 2 - mechanical seals)

For 2 years operation:
1 - set of bearings (line and thrust)
2 - sets of gland packing
2 - shaft sleeves
2 - sets of gaskets and seals
2 - lantern rings
2 - casing wear plate sets
(optional: 2 - mechanical seals)

For 4 years operation:
1 - set of bearings (line and thrust)
2 - sets of gland packing
2 - shaft sleeves
2 - sets of gaskets and seals

2 - lantern rings
2 - casing wear plate sets
1 - impeller
(optional: 2 - mechanical seals)

6.5 Tools required

A typical range of tools that will be required to maintain these pumps is listed below.

Readily available in standard tool kits, and dependent on pump size:

- Open ended spanners (wrenches) to suit up to M 48 screws/nuts
- Socket spanners (wrenches), up to M 48 screws
- Allen keys, up to 10 mm (A/F)
- Range of screwdrivers
- Soft mallet

More specialized equipment:

- Bearing pullers
- Bearing induction heater
- Dial test indicator
- C-spanner (wrench) - for removing shaft nut. (If difficulties in sourcing are encountered, consult Flowserve.)

6.6 Fastener torques

Bolt size	Torque Nm (lb•ft)	
	Pump feet fasteners	All other fasteners
M 16 (⅝ in.)	170 (125)	84 (62)
M 20 (¾ in.)	340 (250)	165 (120)
M 24 (⅞ in.)	590 (435)	285 (210)
M 27 (1 in.)	770 (570)	375 (275)
M 30 (1⅛ in.)	1 100 (810)	540 (400)
M 36 (1⅜ in.)	1 840 (1 350)	900 (660)
M 42 (1⅝ in.)	2 000 (1 475)	1 410 (1 040)
M 48 (1⅞ in.)	2 240 (1 650)	2 060 (1 500)

TIGHTENING TORQUE FOR STAINLESS STEEL STUDS WITH LUBRICATED THREADS		
THREAD SIZE	TIGHTENING TORQUE	
	Nm.	Ft. lbs.
M10x1.5 (3/8–16UNC)	13	10
M12x1.75 (1/2–13UNC)	27	20
M16X2 (5/8-11UNC)	60	45
M20x2.5 (¾-10UNC)	100	75

6.7 Renewal clearances

As wear takes place between the impeller and wear plate the overall efficiency of the pump set will decrease. To maintain optimum efficiency it is recommended that the impeller be adjusted to maintain the impeller axial clearance as detailed in section 3.5, Table of Engineering Data. Typically doubling the clearance can reduce performance by 5% depending on pump size and operating condition.

6.8 Disassembly

⚠ Refer to section 1.6, *Safety*, before dismantling the pump.

CAUTION Before dismantling the pump for overhaul, ensure genuine Flowserve replacement parts are available.

To disassemble the pump, consult the job sectional drawing, general sectional drawing (see section 8), and *Parts list*.

6.8.1 Rotating Element

The following procedure is recommended for removing and disassembling the rotating assembly.

Note: Note that the replacement gaskets and similar consumable materials should be available since they will be required for reassembly.

a) Isolate motor and lock off electrical supply in accordance with local regulations.
b) Isolate suction and discharge valves.
c) Remove guards
d) Disconnect the coupling halves or remove belts from sheaves.
e) Drain pump casing. Remove any auxiliary piping if applicable.
f) Disconnect stuffing box, cooling water and auxiliary piping.
g) Drain the oil from the bearing frame [3122] if bearing frame is being dismantled.
h) Disconnect pump from piping and remove spool pieces as necessary.
i) Remove pump from baseplate to work on bearing frame.

Note: For pumps fitted with an overhead motor mount it is suggested that the motor be removed.

j) On severe duty pumps the suction cover may be removed to work on the suction side wear plate, impeller. Removal of pump from installation is not necessary provided there is adequate room to work. (ie removal of spool pieces from piping).

The remaining steps assume that the pump has been removed.

6.8.1.1 *Frames 1,2,3,&4*

a) Place the sling around the bearing cartridge [3122] and carefully take up the weight without straining the

casing. Refer to Section 3 to determine hoist and sling requirements.

b) Loosen the set screws holding the deflector [2540] on the shaft.

c) Release the thrust bearing housing [3240] hold down bolts and jam nuts. While rotating the pump shaft [2100] by hand, tighten the three jacking screws evenly until the impeller [2200] lightly clamps the stuffing box head [4100] in place. In the case of expeller pumps the same will hold for the housing [4110]. This will simplify withdrawal of the rotating element from the casing.

CAUTION Excessive clamping force could damage bearing races.

Rotating the shaft helps to clear away solids which may be trapped between the impeller and stuffing box head.

d) Remove the bolts connecting the rear support foot [3134] to the baseplate.

e) Remove the pedestal to casing bolts

f) Remove casing [1110] to expose the impeller [2200].

6.8.1.2 ***Frame 5 & 6***

a) Loosen the bolts securing the bearing cartridge to the pedestal. Do not remove bolts.

b) Using the adjusting fixture mounted between the ribs on the bearing cartridge adjust the impeller back towards the gland side wearplate until the impeller makes light contact.

CAUTION Excessive clamping force could damage bearing races. Rotating the shaft helps to clear away solids which may be trapped between the impeller and stuffing box head.

c) Remove the pedestal to casing bolts.

d) Remove the casing [1110] to expose the impeller [2200].

6.8.2 **Stuffing box**

6.8.2.1 ***Shaft seal - gland packing***

a) Remove gland nuts and gland halves [4120]

b) Remove gland packing rings [4130] and lantern rings [4134] using a bent wire.

6.8.2.2 ***Shaft seal - mechanical seal***

Refer to any special instructions supplied with the mechanical seal.

a) Remove seal cover screws and pull off seal cover complete with the stationary seal ring which is held in place by the O-ring seal.

b) The mechanical seal cover can also be removed by placing a wedge into the gland chamfer, as below:

6.8.2.3 ***Impeller and stuffing box***

NEVER APPLY HEAT TO REMOVE IMPELLER

Trapped lubricant or vapour could cause an explosion. Heat could also cause damage to the impeller.

a) Secure the stuffing box [4100] to the pedestal flange using a pair of c-clamps or bolts if appropriate for some sizes.

b) Adjust the impeller away from the gland side wear plate.

c) The impeller is threaded to the shaft and has been self-tightened to the shaft sleeve. To unscrew the impeller the torque must be broken. It will be necessary to either block the impeller or shaft at the drive-end. A fixture similar to that shown in the sketch below may be used. To unscrew the impeller the shaft must be turned counter-clockwise.

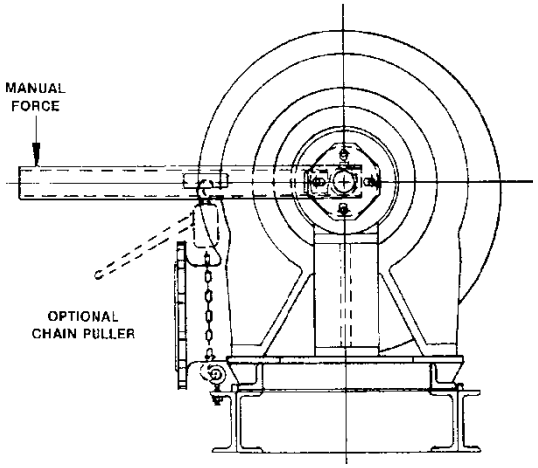

d) On small pumps the impeller can be removed and held by hand however, larger units will require that a hoist be used to lift the impeller. Place a sling through the impeller vanes.

e) Remove the impeller [2200].

f) Remove the expeller housing [4110] & expeller [250] and/or stuffing box head [4100] as applicable to pump construction.

g) Remove bolts securing bearing cartridge [3122] to the pedestal [3120].

h) Remove bearing cartridge [3122].

6.8.3 **Shaft sleeve**

a) Remove the impeller spacer [2460] and shaft sleeve gasket.

b) Remove the shaft sleeve [2445] if scored or worn.

6.8.4 **Bearing housing**

a) Remove the deflector [2540] and the line bearing cover [3260].

b) Remove the pump half coupling and coupling key [6700].

c) Remove the bearing frame support [3134] and OHMM if applicable.
d) Lift the bearing frame assembly into a vertical position with the thrust bearing housing [3240] up. Rest the bearing frame flange on heavy wooden blocks sufficiently high to ensure end of the shaft does not come into contact with the floor or table.
e) Remove the thrust bearing hold down bolts and remove shaft assembly for the bearing frame [3122].

6.8.5 Line bearing
a) Lay the shaft [2100] horizontal and support with wooden 'V' Blocks.
b) Only if necessary remove the line bearing [3011] from the shaft. Bearings removed can easily be damaged and undetected until pump is put back in operation.

6.8.6 Thrust bearings
a) Lay the shaft [2100] horizontal and support with wooden 'V' Blocks.
b) Remove the thrust bearing clamp ring [2542] from the thrust bearing housing [3240].
c) Remove the thrust bearing housing [3240].
d) Bend up the locking tab on the bearing lockwasher [6541] and remove the bearing locknut [3712] and lockwasher [6541].
e) Only if necessary remove the thrust bearings [3031] from the shaft. Bearings removed and reused can easily be damaged and undetected until pump is put back in operation.

Note: On frames 5 & 6 there are springs to preload the thrust bearings. These must be removed as the bearings are removed.

6.8.7 Gland side Wear plates
The wear plate [1915] can be removed from the stuffing box head [4100] if required. The wear plate is secured to the stuffing box head [4100] with studs, nuts and washers.

6.8.8 Suction side wear plates
The wear plate [1915] can be removed from the stuffing box head [4100] if required. The wear plate is secured to the stuffing box head [4100] with studs, nuts and washers.

6.8.8.1 *Standard Duty Pumps*
Remove the wear plate [1915] from the casing [1110]. The wear plate is secured to the casing [1110] with studs, nuts and washers.

6.8.8.2 *Severe Duty Pumps*
a) Remove the suction cover [1223] from the casing [1110].
b) Place the suction cover flat on a table of work place with the wear plate side down.
c) Unfasten the wear plate from the suction cover [1223]. The wear plate [1915] is secured to the suction cover [1223] with studs and enclosed nuts which have o-rings.
d) Lift the suction cover from the wear plate.

6.9 Examination of parts
CAUTION Used parts must be inspected before assembly to ensure the pump will subsequently run properly.

In particular, fault diagnosis is essential to enhance pump and plant reliability.

6.9.1 Casing, seal housing and impeller
a) Inspect for excessive wear, pitting, corrosion, erosion or damage and any sealing surface irregularities.
b) Replace as necessary.
c) Inspect the impeller [2200] and the wear plates [1915] and [1915] for excessive wear or damage. Remove the wear plate from the casing [1110] if necessary.
d) Inspect the casing [1110] and stuffing box head [4100] for damage or excessive thinning of wall sections due to wear or corrosion. Clean the internal surfaces to maintain pump efficiency.
e) Inspect the protector plate [4132] and impeller spacer [2460] and remove if damaged or worn. Clean the internal bore of the stuffing box.

6.9.2 Shaft and sleeve [if fitted)
a) Replace sleeve if grooved, pitted or worn.
b) Clean the shaft and inspect for evidence of corrosion, evidence of cracking, fatigue or mechanical damage. Remove all burrs or nicks paying particular attention to the areas under the lip seals. Check that the shaft is straight within 0.002 inch (0.050 mm).

6.9.3 Gaskets and O-rings
After dismantling, discard and replace.

6.9.4 Bearings
a) It is recommended that bearings are not re-used after any removal from the shaft.
b) The plain liquid lubricated bearings may be re-used if both the bearing bush and bearing sleeve show no sign of wear, grooving or corrosion attack. (It is recommended that both the bush and sleeve are replaced at the same time.)

6.9.5 Bearing isolators, labyrinths or lip seals (if fitted)
a) The lubricant, bearings and bearing housing seals are to be inspected for contamination and damage. If oil bath lubrication is utilised, these

provide useful information on operating conditions within the bearing housing.

b) If bearing damage is not due to normal wear and the lubricant contains adverse contaminants, the cause should be corrected before the pump is returned to service.

c) Labyrinth seals and bearing isolators should be inspected for damage but are normally non-wearing parts and can be re-used.

d) Bearing seals are not totally leak free devices. Oil from these may cause staining adjacent to the bearings.

6.10 Assembly

To assemble the pump consult the sectional drawings, see section 8, *Parts list and drawings*.

Ensure threads, gasket and O-ring mating faces are clean. Apply thread sealant to non-face sealing pipe thread fittings.

6.10.1 Bearing housing

a) Lubricate the internal bores of the bearing cartridge [3122] with the same oil or grease used to lubricate the bearings.
b) Install the thrust bearing housing [3240] in the bearing frame [3122] to ensure a good sliding fit. Remove the thrust bearing housing from the frame.
c) Install the oil sight gauge [3856] and the drain lug in the bearing frame [3122] using Teflon pipe thread sealant. Install the vent plug [6521].

6.10.2 Line bearing

a) Lightly lubricate the shaft [2100] at the line bearing position. Install the line bearing [3011] on the shaft. Use an induction heated or hot oil bath to first heat the bearing [250° F recommended], press the bearing on shaft with the aid of a sleeve designed to push the inner race only. Note that the bearing must remain square to the shaft during assembly and that the inner race must seat on the shaft shoulder.
b) Pack the line bearing with grease if the bearings are being grease lubricated.
c) Protect the bearing by wrapping with a clean, lint free cloth.

6.10.3 Thrust bearing

6.10.3.1 Frames 1, 2 & 3

a) Place the thrust bearing clamp ring [2542] loosely over the shaft on the largest diameter.
b) Install the angular contact bearings [3031] on the shaft [2100] using the same procedure as described in step 6.10.2 . The bearings are mounted back to back as shown.
c) Pack thrust bearing with grease if the bearings are being grease lubricated.
d) Slide the bearing lockwashers [6541] on the shaft and fit the bearing locknut [3712]. Tighten the locknut snugly and allow to cool. Check the tightness and bend one tab on the lockwasher into a slot in the locknut. Protect the bearings from contamination.
e) Carefully install the lip seal [4300] in the thrust bearing housing [3240] by pressing it squarely into the bore. The primary sealing lip [spring loaded] on seal should be installed facing the bearing. A small amount of sealant may be applied on the O.D. of the seal prior to its' installation.
f) Install the square head plug or grease fitting on the tapped hole in the thrust bearing housing flange. Lubricate the o-ring [4610.2] with the bearing lubricant and assemble it into the groove of the outer circumference of the thrust bearing housing [3240].
g) Lubricate the inside bore of the thrust bearing housing [3240] and assemble it over the thrust bearings. Care must be taken to prevent damage of the seal on the shaft.
h) Using capscrews and lockwashers, attach the thrust bearing clamp ring [2542] to the thrust bearing housing [3240]. Lock the threads using Loctite 242 or equivalent.

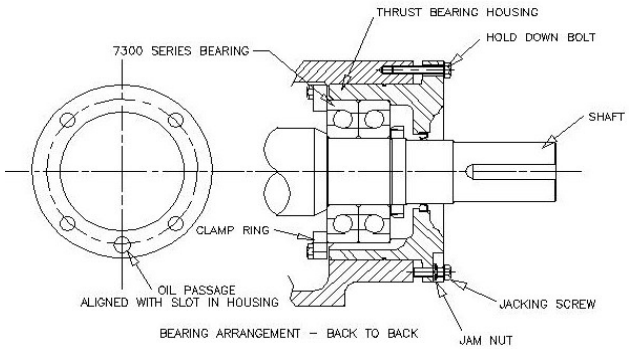

Note: The thrust bearing clamp ring [2542] is provided with one extra hole midway between two adjacent bolt holes to permit free oil flow. On oil lubricated units, this hole must align with the cast oil return at the bottom of the thrust bearing housing bore. For grease lubricated units, this hole should be oriented away from the cast oil return slot at the bottom the thrust bearing housing bore.

Tighten the capscrews evenly ensuring that the clamp ring is not distorted and gap to the bearing housing is even all around. Tighten in accordance with Table 6.6.

6.10.3.2 **Frame 4 pumps**

a) Place the thrust bearing clamp ring [2542] loosely over the shaft on the largest diameter.
b) Install the 4-point angular contact bearing [3031] on the shaft [2100] using the same procedure as described in step 6.10.2 and ensure it is seated against the shoulder.
c) Install the NU-roller bearing.
d) Slide the bearing lockwashers [6541] on the shaft and fit the bearing locknut [3712]. Tighten the locknut snugly and allow to cool. Check the tightness and bend one tab on the lockwasher into a slot in the locknut. Protect the bearings from contamination.
e) Pack bearing with grease if the bearings are being grease lubricated.
f) Carefully install the lip seal [4300] in the thrust bearing housing [3240] by pressing it squarely into the bore. The primary sealing lip [spring loaded] on seal should be installed facing the bearing. A small

amount of sealant may be applied on the O.D. of the seal prior to its' installation.

g) Install the square head plug or grease fitting on the tapped hole in the thrust bearing housing flange. Lubricate the o-ring [4610.2] with the bearing lubricant and assemble it into the groove of the outer circumference of the thrust bearing housing [3240].

h) Lubricate the inside bore of the thrust bearing housing [3240] and assemble it over the thrust bearings. Care must be taken to prevent damage of the seal on the shaft.

i) Using cap screws and lockwashers, attach the thrust bearing clamp ring [2542] to the thrust bearing housing [3240]. Lock the threads using Loctite 242 or equivalent.

6.10.3.3 Frames 5&6

a) Place the shaft in a vertical position such that the coupling end is up.

b) Lighting lubricate the shaft [2100] at the thrust bearing position.

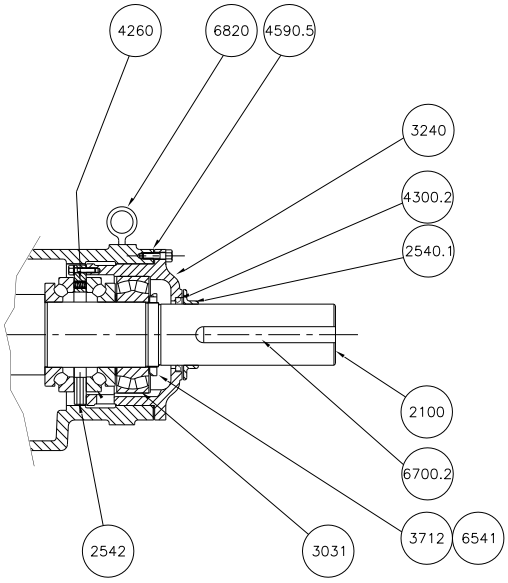

c) Install the inner race of one of the spherical roller thrust bearing [3031] on the shaft. Use an induction heater or hot oil bath to first heat the bearing (250 F recommended), press the bearing on the shaft with the aid of a sleeve designed to push the inner race only. Note that the bearing must remain square to the shaft during assembly and that the inner race must seat on the shaft shoulder.

d) Install the rollers and outer race onto installed inner race.

e) Place the thrust bearing clamp ring [2542] on top of the bearing installed.

f) Insert the springs [4260] into the holes provided in the clamp ring.

g) Install the outer race of the second spherical roller thrust bearing [3031] on top of the assembly. Place 3 - 0.010" spacer shims between the clamp ring and one of the bearing outer races. Centralize the loosely assembled bearing components. Using 2 c-clamps or similar devices compress the springs in the clamp ring.

h) Install the remaining inner bearing race using the same procedure as above.

i) Install the bearing spacer [2460].

j) Install the radial bearing [3031].

k) Slide the bearing lock washers [6541] on the shaft and fit the bearing locknut [3712]. Tighten the locknut snugly and allow to cool. Check the tightness. Before securing the lockwasher tab, remove the spacer shims from the clamp ring. Bend one tab on the lockwasher into a slot in the locknut. Protect the bearings from contamination.

l) Carefully install the lip seal [4300] in the thrust bearing housing [3240] by pressing it squarely into the bore. The primary sealing lip (spring loaded) on seal should be installed facing the bearing. A small amount of sealant may be applied on the O.D. of the seal prior to its installation.

m) Lubricate the inside bore of the thrust bearing housing [3240] and assemble it over the thrust bearings. Care must be taken to prevent damage of the seal on the shaft.

6.10.4 Frame assembly

6.10.4.1 Frame 1 & 2

a) Place the pedestal with the large flange flat on a work surface/table.

b) Lift the bearing cartridge vertical and assemble to the pedestal. Secure in position.

Note: The orientation of the pedestal feet and the tapped holes for the rear support foot should be aligned.

c) Place the assembly so that the shaft when installed will clear the table or work surface. The assembly may be elevated if necessary.

d) Lift the shaft assembly into a vertical position (the coupling end of the shaft is tapped for a lifting bolt).

e) Lower it into the bearing frame [3122]. Note the square head plug (or grease fitting in the thrust bearing housing [3240] must align with the vent plug [6521] in the frame [3122].

f) Install jacking and hold down hardware.

g) Place assembly horizontal and rest on pedestal feet.

h) Install rear support foot for stability.

6.10.4.2 Frame 3& 4

a) Place the shaft assembly in a vertical position with the thrust bearing housing [3240] resting on the flange face and supported by blocks or clamps.

Access to one through hole in the thrust bearing housing is required to attach one bolt.

i) Lift the bearing frame assembly [3122] vertically and lower over the shaft assembly. Manually guide the line bearing outer race into the bearing frame bore. Note the square head plug (or grease fitting in the thrust bearing housing [3240] must align with the vent plug [6521] in the frame [3122].
j) Install at least one thrust bearing housing to bearing frame hold down cap screws complete with lockwasher to prevent the assembly from coming apart when lifting.
k) Place the bearing frame assembly into a horizontal position.
l) Install the remaining cap screws and lockwashers. Assemble the jam nuts on the jacking screws and assemble these into the thrust bearing housing [3240].
m) Place pedestal on its feet.
n) Install cartridge assembly into the pedestal. Secure with appropriate hardware.
o) Install rear support foot for stability.

6.10.4.3 ***Frames 5&6***

a) Place the shaft assembly in a vertical position with the thrust bearing housing [3240] resting on the flange face. The shaft should be supported in a fixture for safety and to prevent damage. Access to one hole in the thrust bearing housing [3240] is required to attach one bolt.

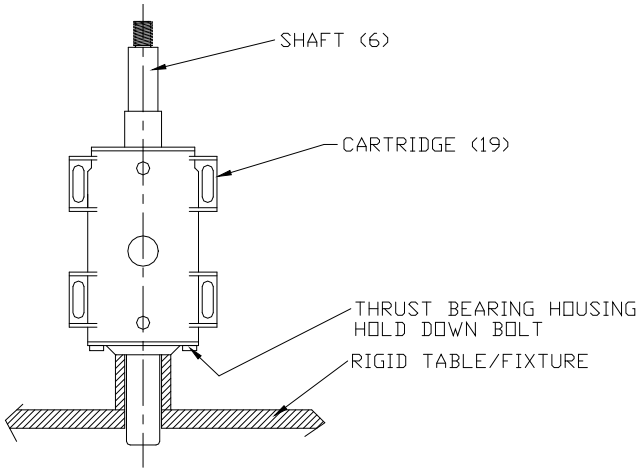

b) Install the gasket [4590.6] onto the housing flange.
c) Lift the bearing cartridge [3122] vertically and lower over the shaft assembly. Manually guide the line bearing outer race into the bearing cartridge bore. The thrust bearing housing [3240] and cartridge [3122] are orientated to ensure that the oil return slot in the thrust bearing housing [3240] is properly located.
d) Install at least one thrust bearing housing to bearing frame hold down cap screw complete with lockwasher to prevent the assembly from coming apart when lifting.
e) Install oil site glass [3856] and plugs in side of bearing cartridge [3122].
f) Place the bearing frame assembly into a horizontal position and mount unto the pedestal rails.
g) The pedestal rails have sets of holes that will be used to lock the pedestal in position. The outer holes will be used for initial installation.

Note: As the pump wears in service and the impeller is readjusted the inner holes will be exposed and the hold-down bolts will have to be moved.

h) Install the remaining hold down cap screws and lockwashers into the bearing housing [3240].
i) Install the cartridge hold down bolts with the heavy plate washers but do not tighten.
j) Install the adjusting fixture [6569] between the ribs of the bearing cartridge [3122]. The fixture may be installed on either side of frame as convenient for the installation.

6.10.5 **Line Bearing Cover**

6.10.5.1 ***Frames 1-4***

a) Carefully install the lip seal [4300] in the line bearing cover [3260] by pressing it squarely into the bore. The primary sealing lip [spring loaded] on seal should be installed facing the bearing. A small amount of sealant may be applied on the O.D. of the seal prior to its' installation.
b) Lubricate the o-ring [4610.1] and assemble into the groove of the line bearing cover.
c) Assemble the line bearing cover [3260] over the shaft and squarely into the bearing frame bore. Fasten to the bearing frame with cap screws, washers and hex nuts. Tighten firmly, but not excessively.
d) Assemble the deflector [2540] loosely over the shaft but do not tighten the set screws.
e) Install the coupling key [6700] and tape to the shaft.
f) Rotate the shaft and check that runout does not exceed 0.002 inch [0.050 mm).

6.10.5.2 ***Frames 5 & 6***

a) Install the lip seal [4300] into the line bearing cover [3260].
b) Assemble the gasket [4590.4] onto the face of the line bearing cover [3260].
c) Assemble the line bearing cover [3260] over the shaft and squarely into the bearing frame bore. Fasten to the bearing frame with cap screws, washers and hex nuts. Tighten firmly but not excessively.
d) Assemble the deflector [2540] with a slight gap (0.06") to the line bearing cover [3260].

e) Install the coupling key [6700] and tape to the shaft.
f) Mount a dial indicator to the bearing frame [3130] and indicate shaft under bearing frame flange (approx. mid way between impeller mounting face and end of sleeve area. Rotate shaft and check that run-out does not exceed 0.002 inch (0.050 mm).

6.10.6 **Stuffing box**

6.10.6.1 ***All***

a) Install the gland studs [6572] using Loctite grade A or equivalent. Install the square head plugs [6569] in the stuffing box as required using pipe sealant.
b) Install the shaft sleeve onto the shaft. The hock type sleeve must be seated against the shaft shoulder. Application of Loctite is not necessary as impeller tightening torque during operation is sufficient to ensure sleeve rotation.

6.10.6.2 ***Standard packing***

a) Install the protector plate [4132] in the stuffing box head [4100]. Heavy grease may be applied to mating faces to help hold it in position while assembling the stuffing box head to the gland side wear plate [1915].
b) With gland side wear plates facing up, lift the stuffing box head [4100] and lower onto the wear plate.
c) Place the seal washers [4590] over the studs followed by the steel washers. Apply Loctite 242 or equivalent to nut threads and fasten wear plate in position. Torque nuts per table.
d) Assemble the stuffing box head [4100] over the shaft sleeve [2445] and orientate the lantern ring connections to suit auxiliary pipe These connections are normally placed on the vertical center-line for proper venting and draining as well as providing optimum gland stud access.
e) Push the stuffing box head [4100] back against the pedestal support flange face and clamp into position. Back off the thrust bearing housing jack screw and tighten the thrust bearing housing hold down cap screws to slide the rotor assembly forward such that the end face of the shaft sleeve [2445] protrudes beyond the face of stuffing box head (standard packed pumps only).
f) Install the shaft sleeve gasket [4590] on the shaft, ensuring that the outside diameter is no larger than the sleeve.

6.10.6.3 ***Optional expeller seal-frame 1, 2, 3 & 4***

a) Assemble the stuffing box [4100] over the sleeve [2445] and into the bearing frame [3122] register. Orient the grease fitting to suit the installation. Note that if the optional solid gland with lip seal design is used, it must be installed first.
b) Install O-ring onto the expeller stuffing box (corner for frames 1 & 2, groove for frames 3 & 4). Install expeller wear plate [1915.3] onto the stuffing box.

Note: Some units may be built with a 1 pc stuffing box/wear plate. In this cause this step will be eliminated.

c) Install the expeller [2250] over the shaft sleeve. Expeller should seat against the sleeve shoulder but be clear of the expeller wear plate [1915.3]. Adjust the shaft [2100] forward to ensure that the expeller [250] when installed will not bind against the stuffing box head [4100].
d) Install gasket [4590.4] over expeller to face of stuffing box [4100].
e) Install expeller housing [4110] to stuffing box [4100], clamp in place.

6.10.6.4 ***Optional expeller seal-frame 5***

a) Install the gland studs [6572] into the loose stuffing box [4100] using Loctite grade A or equivalent. Install the square head plug [6569] and grease nipple [6569] in the stuffing box as required using pipe sealant. For further information see sections on packing earlier in this manual.
b) Install studs in expeller wear plate [1915.3], secure using Loctite #242.
c) Mount gasket [4590.3] onto wear plate [1915.3] and install loose stuffing box [4100]. Note location of grease nipple relative to any lifting facility.
d) Assemble the expeller wear plate/stuffing box over the sleeve [2445] and into the adaptor support [3120] register. Orientate the grease fitting to suit the installation. Clamp in position for safety.
e) Adjust the shaft [2100] forward to ensure that the expeller [2250] when installed will not bind against the expeller wear plate [1915.3].
f) The shaft sleeve is grooved for an o-ring [4610]. Lubricate the o-ring and install.
g) Install the expeller [2250] onto the shaft sleeve [2445] vanes first.
h) Using a locking collar secure the expeller in place.
i) Install the gasket [4590.1] into the expeller housing [4110] recess. Use a small amount of lubricant to hold in place. Remove clamps holding the wear plate in place. Assemble the expeller housing [4110] onto the wear plate [1915.3]. Clamp the housing in place.
j) Remove locking collar and assemble gasket [4590.2] onto the shaft and seat against the expeller hub face.

6.10.7 **Impeller Installation**

a) Install the impeller spacer [2460] on standard pumps only and install the impeller gasket [4590.2]

on all pumps.

b) Due to the method of assembling the impeller, it is recommended to smear the sleeve face and both sides of the impeller spacer [2460] with a heavy grease or a silicon sealant before assembling onto the shaft which will help to hold the impeller spacer in position during assembly.

c) For 2.5M182 only - The impeller requires an adapter bushing to match the shaft threads. If a new impeller is being installed an insert must be installed. Thread the insert into the impeller and lock into position using Loctite 242.

d) Apply anti-seize compound to the shaft threads and screw the impeller onto the shaft. For large sizes it is more practical to hold impeller using a sling and hoist and turn the shaft.

e) Tighten impeller per table 6.10.10.2

CAUTION **Failure to tighten the impeller [2200] and spacer [2460] securely against the sleeve may cause serious damage to pump components.**

Note: The thread is designed so that during operation the impeller will tend to tighten onto shaft. Therefore a clockwise shaft rotation (looking from coupling end) will screw impeller on.

f) Release the thrust bearing housing hold down bolts and tighten the jacking screws to pull the impeller back to the stuffing box head [4100]. The stuffing box head must not be rigidly clamped.

6.10.8 Suction Side Wear plate

a) Install the studs [6572] in the wear plate [1915] using Loctite grade A or equivalent.

6.10.8.1 Standard Duty Pumps

a) Lift wear plate and install into casing.

b) Place the sealing washer [4590.5] over the studs [6572]. Secure wear plate [1915] in place using hex nuts and washers using Loctite 242 or equivalent. Tighten in accordance with table in section 6.6.

CAUTION

Excessive or uneven tightening torque may distort wear plate affecting impeller running clearances or result in broken studs.

6.10.8.2 Severe Duty Pumps

a) Lift suction cover [1223] and mount over the suction side wear plate [1915].

b) Install o-ring into enclosed hex nuts. A small amount of lubricant would be useful to hold the o-ring in place.

c) Fasten wear plate to cover with the enclosed nuts. Tighten in accordance with Table tables in section 6.6.

CAUTION

Excessive or uneven tightening torque may distort wear plate affecting impeller running clearances or result in broken studs.

d) Place the casing [1110] on a clean section of the floor with the discharge pointing counter-clockwise. Refer also to the pump elevation drawing if applicable.

e) Apply heavy grease to casing gasket [4590] and place in position on the casing flange.

f) Lower the suction cover assembly [1223] into the casing. Tighten the casing bolts. The casing to suction cover gap is approximately .050 inches at which point the casing gasket should be compressed.

6.10.9 Casing

a) Smear a small amount of grease or anti-seize compound over one face of the gasket [4590] and place it on the stuffing box head [4100] with coated face against flange.

b) Lift the casing and assemble to the pedestal. The discharge may be orientated to various configurations. Check the installation or GA drawing for the proper position.

c) Secure into position. Ensure that the impeller is free to rotate before torquing bolts.

d) Set the impeller front clearance in accordance with instruction earlier in this section of the manual.

6.10.10 Shaft seal

6.10.10.1 Packing

a) The two piece lantern ring [4134] must be installed first for standard L5 arrangement. The ports in the lantern ring do not need to be aligned with the inlet/outlet ports. If 2L3 arrangement is being used then 2 rings are inserted first.

b) Insert one packing ring at a time into the stuffing box. Push the packing as far as possible into the packing bore.

c) When installing additional rings, stagger the joints.

d) Ensure that the shaft can be turned by hand after each packing ring insertion.

Note: It may not be possible to insert the last ring in the box and still insert the gland. In this case, omit the last ring of packing and install the gland.

Standard Packed Box Arrangement

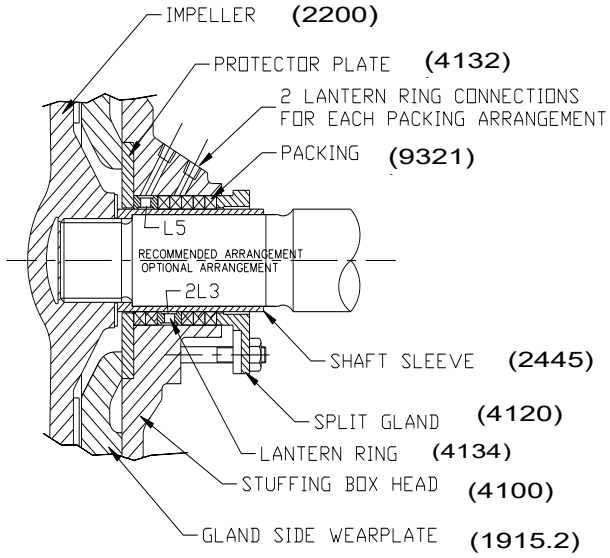

FIG.6 STUFFING BOX ARRANGEMENT

The last ring of packing may be installed after the pump has been in service and sufficient space is available as the packing “runs-in”.

e) Install the gland halves [4120], tighten the gland nuts [6580] only finger tight.

CAUTION New packing has to be run-in and it is good practice to start the pump with the stuffing box gland quite loose. Packing that is too tight in the box will cause undue friction, creating heat which will glaze the packing and possible score the shaft sleeves. To be effective, the packing must remain soft and pliable. If stuffing box friction is so great that the pump shaft cannot be turned by hand, the box is not properly packed.

6.10.10.2 Mechanical seal

These details are specific to non-cartridge seals therefore they may not apply. Refer to any special instructions supplied with the mechanical seal.

a) Before the mechanical seal can be installed, the pump must be assembled with the correct impeller running clearances (ie: all assembly steps above). A scribe mark is then placed on the circumference of the sleeve to mark the end of the box. This mark is used to locate the seal position referenced by the mechanical seal drawing provided.
b) After scribing the sleeve, remove the rotating element from the casing. Do not adjust the bearing housing.
c) Remove the impeller [2200] and stuffing box head [4100]. Assemble the mechanical seal components, including gland plates, gaskets and rotating parts over the sleeve. Locate the seal relative to the scribed markings on the shaft sleeve [2445] as indicated by the seal manufacturers’ instruction.
d) Re-assemble components in accordance with original assembly procedure. Torque the impeller in accordance with information below.

Table: 6.10.10.2
Impeller Tightening Torque

Pump	Nm	Ft-lbs
2.5M091	68	50
3M091	102	75
3M111	136	100
4M122	244	180
5M142	407	300
2.5M182/3	407	300
3M183	447	330
4M223	610	450
5M244	1491	1100
6M163	655	483
6M294	2033	1500
8M193	1017	750
8M324	2712	2000
10M234	2034	1500
12M264	3254	2400
14M264	3390	2500
10M345	7321	5400
12M375	8948	6600
14M375	10711	7900
18M416	10304	7600
20M416	10304	7600
24M476	12500	12500

e) Assemble the mechanical seal gland plate and gasket and fasten using gland studs [6572]. Secure with nuts [6580] and tighten each by hand. Further tighten the nuts in accordance with Table in 6.6. Rotate the shaft to ensure that it turns freely without rubbing or binding.
f) Re-assemble the rotating element into the casing. Do not adjust the thrust bearing housing.
g) Set the deflector [2540] at the line bearing cover [3260] so that they do not contact when the shaft is rotated. Lock in place with the setscrews provided.

6.10.11 Final assembly

a) Lift the assembled pump onto the baseplate and position the casing feet over the tapped holes in the baseplate.
b) On frame sizes 1 to 4, loosen the bolts which attach the rear support foot [3134] to the bearing frame [3122]. Level the unit and align with the piping. Tighten the bolts attaching the casing feet to the baseplate in accordance with Table 6.6 using for tightening torques. Do not distort casing or frame.
c) Install the pump coupling or sheave as required.
d) Refer to Section 4, Installation and Section 5,

Preparation for Operation.

e) It is recommended that the pump not be packed until required. Refer to stuffing box packing procedure in this section. Protect the stuffing box bore and seal area with clean dry rags.

6.11 Impeller axial clearance adjustment

Note: This procedure should not be used on units with mechanical seals if the design is such that a liquid seal cannot be maintained when the rotor is moved axially against the wear plate.

DANGER NEVER ATTEMPT TO CHANGE THE CLEARANCE WHEN THE PUMP IS RUNNING.

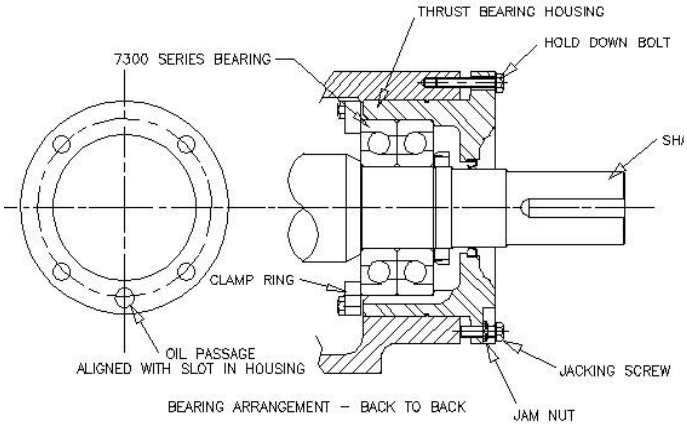

6.11.1 **Frames 1-4**

If the coupling has limited axial adjustment capability, the pump and driver must be uncoupled prior to adjusting the clearance in order to permit free movement.

a) Loosen the two set screws retaining the deflector [2540] and check that the deflector is free to move axially on the shaft.
b) Loosen the thrust bearing housing jam nuts and back off the three jacking screws at least 1.5 mm (0.060 inch).
c) Move the rotor towards the wear plate [1915] by tightening the three hold-down cap screws evenly and uniformly until the impeller [2200] just touches the wear plate. This can be best established by rotating the shaft and stopping the forward motion at the first sign of rubbing. If the shaft cannot be rotated, back off the bearing housing with the jacking screws until a just detectable rub is obtained. Check that the gap between the two machined faces of the thrust bearing housing [3240] and the bearing frame [3122] are parallel within 0.003 inch (0.076 mm). Adjust the jack screws and hold down cap screws as required to achieve this parallelism. When the impeller [2200] just touches the wear plate [1915] and the thrust bearing housing [3240] is parallel to the bearing frame [3122] the axial clearance between the impeller and wear plate is zero.

6.11.2 **Option1**

a) Place a dial indicator, set to end of shaft [1110] or on housing [3240] face.
b) Set indicator reading to zero (0).
c) Note required impeller clearance.

6.11.3 **Option 2**

a) Measure and record the axial gap between the thrust bearing housing flange and bearing frame end face. Determine the required impeller axial running clearance from Section I and add this to the above measurement to establish the required gap setting.

6.11.4

a) Loosen the thrust bearing housing hold down cap screws slightly and tighten the jack screws. Until the required dial indicator reading (6.11.1) or housing gap reading (6.11.2) is achieved.
b) Alternately and gradually tighten the hold down cap screws and jack screws until the required gap setting is achieved at each hold down cap screw location. Note that the gap at each jack screw will be slightly larger as a result of minor elastic distortion of the thrust bearing housing flange caused by the high pre-load forces. The gap setting at any set of screws must be the same within 0.003 inch [0.076 mm). Careful attention to this procedure will help ensure long thrust bearing life.
c) While preventing the jack screws from rotating, tighten the jam nuts to lock them in position.
d) Adjust the axial position of the deflector [2540] so that it is clear of the line bearing cover [3260] by approximately 0.030 inch (0.75 mm) and tighten the setscrews firmly. Excessive tightening may mar the shaft.
e) Manually rotate the shaft to ensure that there is no rubbing or binding.
f) On belt driven units, adjust the pump or driver sheave to maintain belt alignment. (Refer to Section 4.5.2.2).
g) Check the alignment on direct driven units (refer to Section 4) and reassemble the coupling components.
h) Replace any safety guards which may have been removed.

6.11.2 **Frames 5&6**

DANGER Never attempt to change the clearance when the pump is running.

If the coupling has limited axial adjustment capability,

the pump and driver must be uncoupled prior to adjusting the clearance in order to permit free movement. Before doing so, ensure that the impeller is free to rotate. Settled slurry will make impeller adjustment difficult. The casing may have to be flushed to remove heavy slurry.

a) Loosen the eight (8) cartridge hold down bolts located on the side of the cartridge [3122].
b) Move the cartridge towards the pump suction by adjusting the screw on the adjusting assembly which is mounted on the pedestal between adjacent ribs until the impeller makes contact with the suction side wear plate. It is advisable to rotate shaft/impeller while making the adjustment as the first sign of contact will signify zero clearance. If the impeller can not be rotated the cartridge should be adjusted backwards until the impeller is just making contact. Place a dial indicator on to the shaft end or bearing cartridge and set indicator to zero.
c) Determine the required impeller axial running clearance from Section I and add this to the above measurement to establish the required gap setting. Adjust the cartridge/shaft away from the casing until the desired reading is achieved.
d) Tighten the hold down bolts on the cartridge side flanges in accordance with tables in 6.6.
d) Manually rotate the shaft to ensure that there is no rubbing or binding.
e) On belt driven units, adjust the pump or driver sheave to maintain belt alignment

7 FAULTS; CAUSES AND REMEDIES

FAULT SYMPTOM

Pump overheats and seizes	Bearings have short life	Pump vibrates or is noisy	Mechanical seal has short life	Mechanical seal leaks excessively	Pump requires excessive power	Pump loses prime after starting	Insufficient pressure developed	Insufficient capacity delivered	Pump does not deliver liquid	PROBABLE CAUSES	POSSIBLE REMEDIES
										A. System troubles	
●									●	Pump not primed.	Check complete filling. Vent and/or prime.
		●				●		●	●	Pump or suction pipe not completely filled with liquid.	
		●				●		●	●	Suction lift too high or level too low.	Check NPSHa>NPSHr, proper submergence, losses at strainers/fittings.
●		●						●	●	Insufficient margin between suction pressure and vapour pressure.	
						●	●	●		Excessive amount of air or gas in liquid.	Check and purge pipes and system.
						●		●	●	Air or vapour pocket in suction line.	Check suction line design for vapour pockets.
						●		●		Air leaks into suction line.	Check suction pipe is airtight.
						●		●		Air leaks into pump through mechanical seal, sleeve joints, casing joint or pipe plugs.	Check and replace faulty parts. CONSULT FLOWSERVE.
		●						●		Foot valve too small.	Investigate replacing the foot valve.
		●						●		Foot valve partially clogged.	Clean foot valve.
		●				●		●	●	Inlet of suction pipe insufficiently submerged.	Check out system design.
							●	●	●	Speed too low.	CONSULT FLOWSERVE.
					●					Speed too high.	CONSULT FLOWSERVE.

FAULT SYMPTOM

Pump overheats and seizes	Bearings have short life	Pump vibrates or is noisy	Mechanical seal has short life	Mechanical seal leaks excessively	Pump requires excessive power	Pump loses prime after starting	Insufficient pressure developed	Insufficient capacity delivered	Pump does not deliver liquid	PROBABLE CAUSES	POSSIBLE REMEDIES
						●	●	●		Total head of system higher than differential head of pump.	Check system losses. Remedy or CONSULT FLOWSERVE.
					●					Total head of system lower than pump design head.	
					●					Specific gravity of liquid different from design.	Check and CONSULT FLOWSERVE.
					●		●	●		Viscosity of liquid differs from that for which designed.	
●		●								Operation at very low capacity.	Measure value and check minimum permitted. Remedy or CONSULT FLOWSERVE.
	●	●			●					Operation at high capacity.	Measure value and check maximum permitted. Remedy or CONSULT FLOWSERVE.
										B. Mechanical troubles	
●	●	●	●	●	●					Misalignment due to pipe strain.	Check the flange connections and eliminate strains using elastic couplings or a method permitted.
		●								Improperly designed foundation.	Check setting of baseplate: tighten, adjust, grout base as required.
	●	●	●	●	●					Shaft bent.	Check shaft runouts are within acceptable values. CONSULT FLOWSERVE.
●	●	●			●					Rotating part rubbing on stationary part internally.	Check and CONSULT FLOWSERVE, if necessary.
●	●	●	●	●						Bearings worn	Replace bearings.
					●		●	●		Wearing ring surfaces worn.	Replace worn wear ring/surfaces.
		●					●	●		Impeller damaged or eroded.	Replace or CONSULT FLOWSERVE for improved material selection.
				●						Leakage under sleeve due to joint failure.	Replace joint and check for damage.
			●	●						Shaft sleeve worn or scored or running off centre.	Check and renew defective parts.
			●	●	●					Mechanical seal improperly installed.	Check alignment of faces or damaged parts and assembly method used.
			●	●	●					Incorrect type of mechanical seal for operating conditions.	CONSULT FLOWSERVE.
●	●	●	●	●						Shaft running off centre because of worn bearings or misalignment.	Check misalignment and correct if necessary. If alignment satisfactory check bearings for excessive wear.
●	●	●	●	●						Impeller out of balance resulting in vibration.	Check and CONSULT FLOWSERVE.
			●	●	●					Abrasive solids in liquid pumped.	
			●	●						Internal misalignment of parts preventing seal ring and seat from mating properly.	
			●	●						Mechanical seal was run dry.	Check mechanical seal condition and source of dry running and repair.

FAULT SYMPTOM

Pump overheats and seizes	Bearings have short life	Pump vibrates or is noisy	Mechanical seal has short life	Mechanical seal leaks excessively	Pump requires excessive power	Pump loses prime after starting	Insufficient pressure developed	Insufficient capacity delivered	Pump does not deliver liquid	PROBABLE CAUSES	POSSIBLE REMEDIES
			●	●						Internal misalignment due to improper repairs causing impeller to rub.	Check method of assembly, possible damage or state of cleanliness during assembly. Remedy or CONSULT FLOWSERVE, if necessary.
●	●	●								Excessive thrust caused by a mechanical failure inside the pump.	Check wear condition of impeller, its clearances and liquid passages.
	●	●								Excessive grease in ball bearings.	Check method of regreasing.
	●	●								Lack of lubrication for bearings.	Check hours run since last change of lubricant, the schedule and its basis.
	●	●								Improper installation of bearings (damage during assembly, incorrect assembly, wrong type of bearing etc).	Check method of assembly, possible damage or state of cleanliness during assembly and type of bearing used. Remedy or CONSULT FLOWSERVE, if necessary.
	●	●								Damaged bearings due to contamination.	Check contamination source and replace damaged bearings.
										C. MOTOR ELECTRICAL PROBLEMS	
		●			●		●	●		Wrong direction of rotation.	Reverse 2 phases at motor terminal box.
					●			●		Motor running on 2 phases only.	Check supply and fuses.
	●	●						●		Motor running too slow.	Check motor terminal box connections and voltage.

8 PARTS LIST AND DRAWINGS

8.1 Standard Duties-Frames 1 & 2

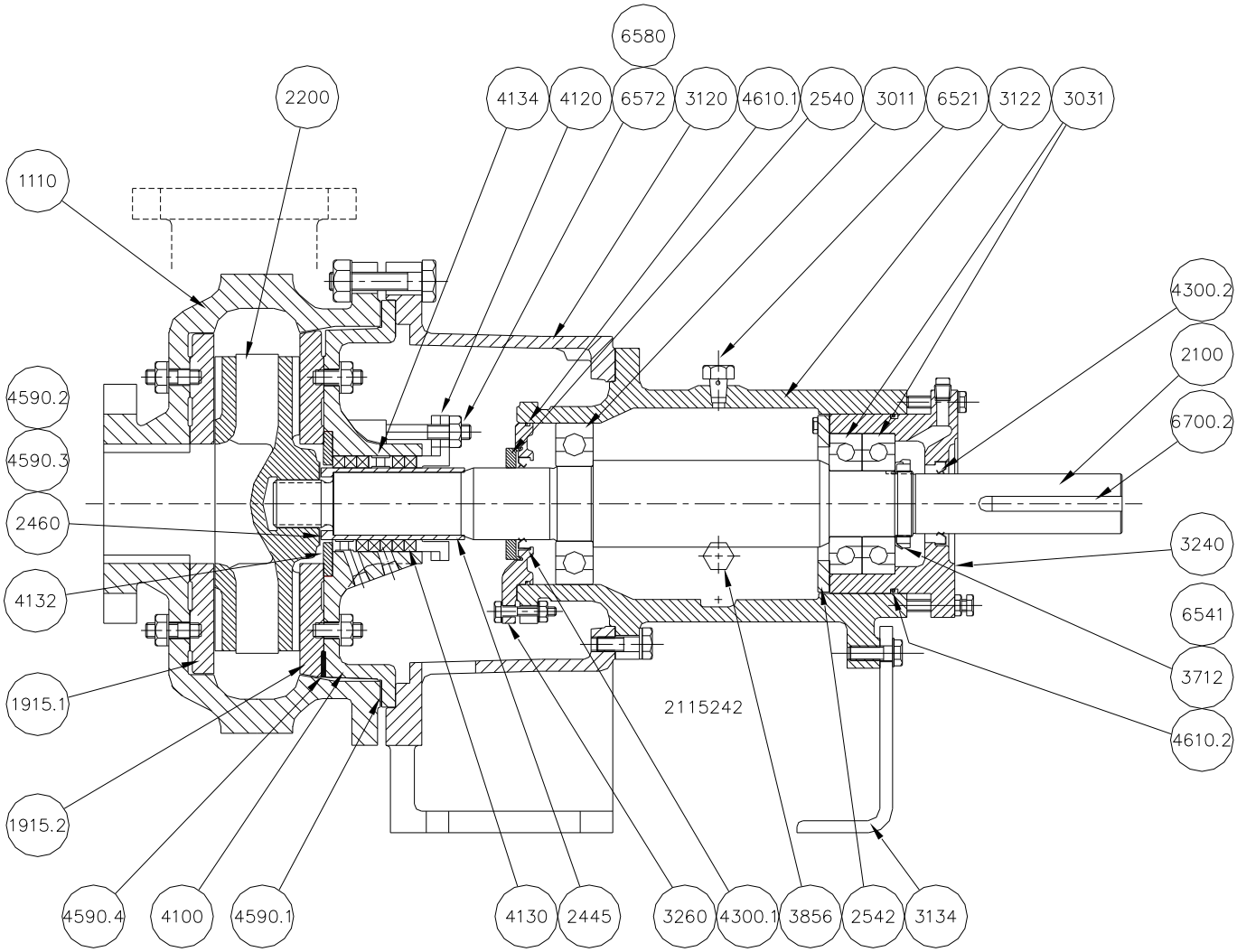

Ref.	Description	Ref.	Description	Ref.	Description
1110	Casing	3122	Bearing Cartridge	4590.1	Gasket, Casing
1915.1	Wear plate, Suction	3134	Support Foot	4590.2	Gasket, Impeller
1915.2	Wear plate, Gland	3240	Thrust bearing Housing	4590.3	Gasket, Sleeve
		3260	Line Bearing Cover	4590.4	Gasket, wear plate
2100	Shaft	3712	Lock Nut, Bearing	4590.5	Gasket, wear plate
2200	Impeller	3856	Oil Level Site Gauge	4610.1	O-ring, Line Bearing
2445	Shaft Sleeve			4610.2	O-ring, Thrust Bearing
2460	Spacer, Impeller	4100	Stuffing Box		
2540	Deflector	4120	Gland Half	6521	Vent Plug
2542	Clamp Ring	4130	Packing	6541	Lockwasher
		4132	Protector Plate	6572	Stud, wear plate
3011	Line bearing	4134	Lantern Ring	6580	Nut, wear plate
3031	Thrust bearing	4300.1	Seal, Line Bearing	6700.1	Key, coupling
3120	Adaptor Support	4300.2	Seal, Thrust Bearing	6700.2	Key, Shaft

8.2 Standard Duty-Frames 1&2 with Expeller

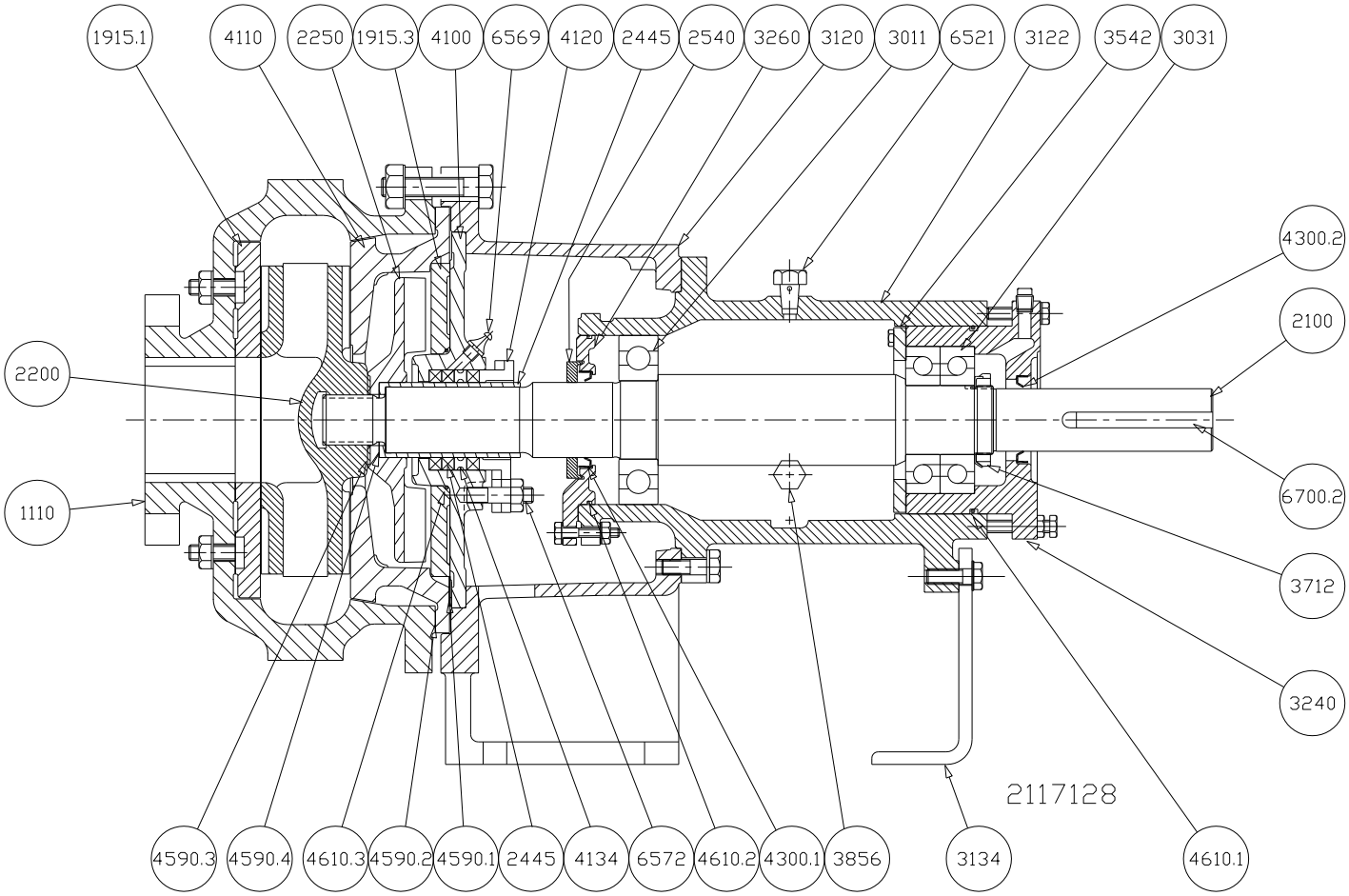

Ref.	Description	Ref.	Description	Ref.	Description
1110	Casing	3122	Bearing Cartridge	4590.2	Gasket, Expeller Housing
1915.1	Wear plate, Suction	3134	Support Foot	4590.3	Gasket, Impeller
1915.2	Wear plate, Gland	3240	Thrust bearing Housing	4590.4	Gasket, Sleeve
1915.3	Wear plate, expeller	3260	Line Bearing Cover	4590.5	Gasket, wear plate
		3712	Lock Nut, Bearing	4610.1	O-ring, thrust bearing
2100	Shaft	3856	Oil Level Site Gauge	4610.2	O-ring, Line bearing
2200	Impeller			4610.3	O-ring, Expeller Wear Plate
2250	Radial Flow Impeller, Expeller	4100	Stuffing Box		
2445	Shaft Sleeve	4110	Housing, expeller	6521	Vent Plug
2540	Deflector	4120	Gland Half	6541	Lockwasher
2542	Clamp Ring	4130	Packing	6569	Plug, square head
		4134	Lantern Ring	6572	Stud, wear plate
3011	Line bearing	4300.1	Seal, Line Bearing	6580	Nut, wear plate
3031	Thrust bearing	4300.2	Seal, Thrust Bearing	6700.1	Key, Coupling
3120	Adapter Support	4590.1	Gasket, Casing	6700.2	Key, Shaft

8.3 Standard Duty Frame 3 & 4

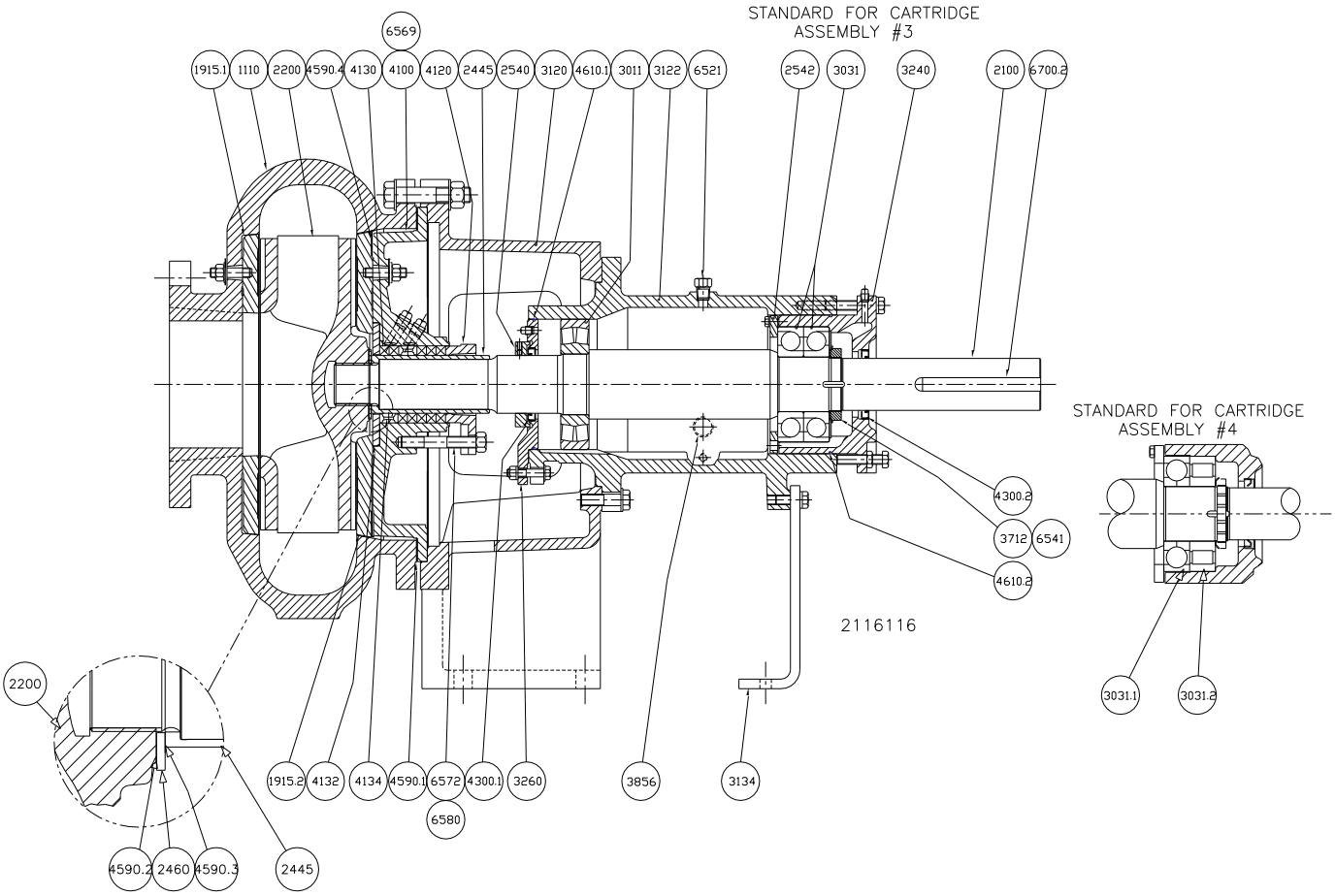

Ref.	Description	Ref.	Description	Ref.	Description
1110	Casing	3134	Support Foot	4590.3	Gasket, Sleeve
1915.1	Wear plate, Suction	3240	Thrust brg.Hsg.	4590.4	Gasket, wear plate
1915.2	Wear plate, Gland	3260	Line brg. Cover	4590.5	Gasket, wear plate
		3712	Lock Nut, Bearing	4610.1	O-ring, Line bearing
2100	Shaft	3856	Oil Level Site Gauge	4610.2	O-ring, thrust bearing
2200	Impeller				
2445	Shaft Sleeve	4100	Stuffing Box	6521	Vent Plug
2460	Spacer, Impeller	4120	Gland Half	6541	Lockwasher
2540	Deflector	4130	Packing	6569	Plug, square head
2542	Clamp Ring	4132	Protector Plate	6572	Stud, wear plate
		4134	Lantern Ring	6580	Nut, wear plate
3011	Line bearing	4300.1	Seal, Line bearing	6700.1	Key, coupling
3031	Thrust bearing	4300.2	Seal, Thrust Brg	6700.2	Key, Shaft
3120	Adaptor Support	4590.1	Gasket, Casing		
3122	Bearing Cartridge	4590.2	Gasket, Impeller		

8.4 Standard Duty - Frame 3&4 with Expeller

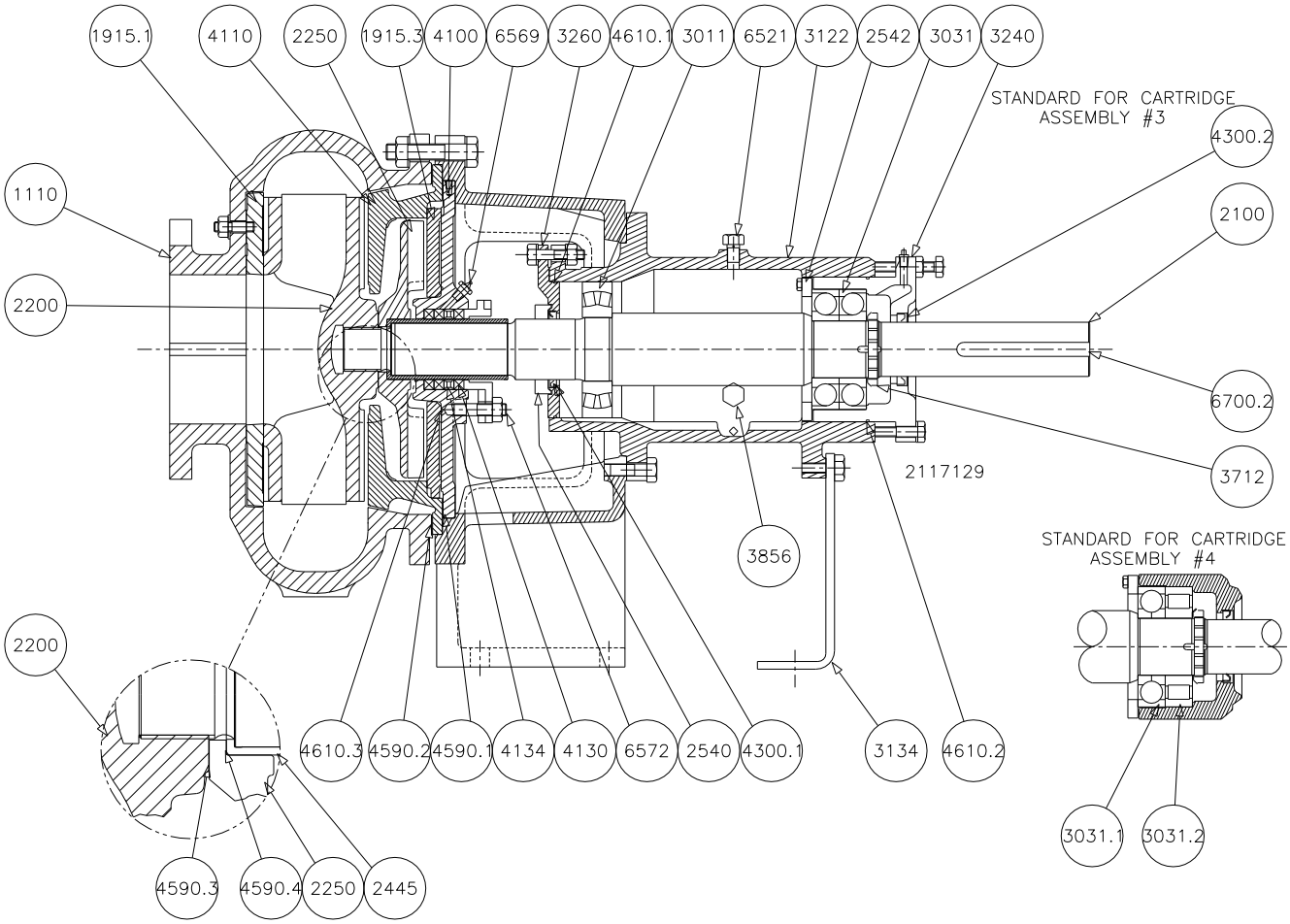

Ref.	Description	Ref.	Description	Ref.	Description
1110	Casing	3122	Bearing Cartridge	4590.2	Gasket, Expeller Hsg
1915.1	Wear plate, Suction	3134	Support Foot	4590.3	Gasket, Impeller
1915.2	Wear plate, Gland	3240	Thrust brg.Hsg.	4590.4	Gasket, Sleeve
1915.3	Wear plate, Expeller	3260	Line brg. Cover	4590.5	Gasket, wear plate
		3712	Lock Nut, bearing	4610.1	O-ring, Line brg.
2100	Shaft	3856	Oil Level Site Gauge	4610.2	O-ring, thrust brg
2200	Impeller			4610.3	O-ring, Expeller WrPlt
2250	Radial flow impeller, expeller	4100	Stuffing Box		
2445	Shaft Sleeve	4110	Housing, expeller	6521	Vent Plug
2540	Deflector	4120	Gland Half	6541	Lockwasher
2542	Clamp Ring	4130	Packing	6569	Plug, square head
		4134	Lantern Ring	6572	Stud, wear plate
3011	Line bearing	4300.1	Seal, Line bearing	6580	Nut, wear plate
3031	Thrust bearing	4300.2	Seal, Thrust Brg	6700.1	Key, coupling
3120	Adaptor Support	4590.1	Gasket, Casing	6700.2	Key, Shaft

8.5 Severe Duty-Frames 2,3 & 4

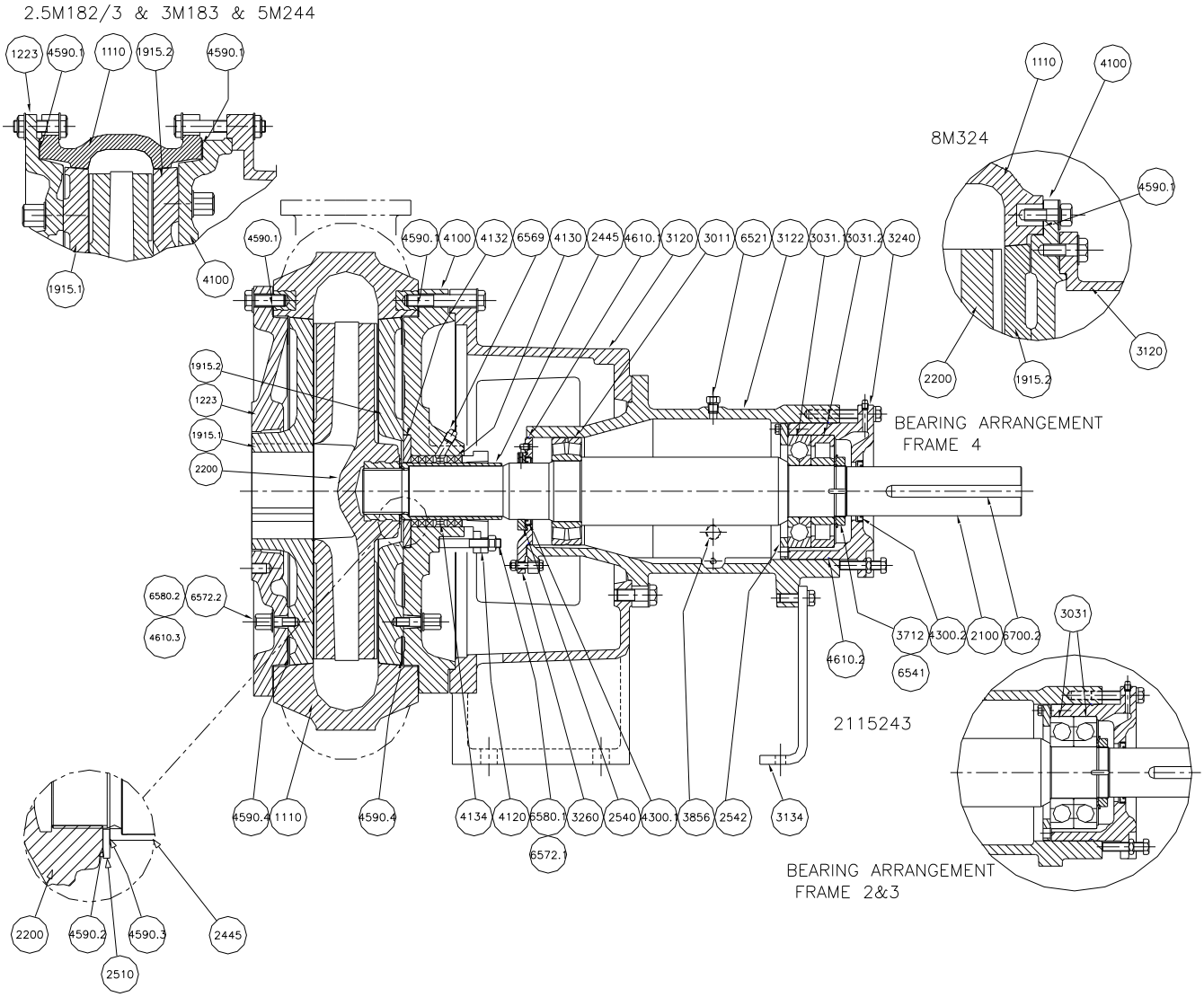

Ref.	Description	Ref.	Description	Ref.	Description
1110	Casing	3134	Support Foot	4590.4	Gasket, wear plate
1915.1	Wear plate, Suction	3240	Thrust bearing Housing	4610.1	O-ring, Line Bearing
1915.2	Wear plate, Gland	3260	Line Bearing Cover	4610.2	O-ring, Thrust Bearing
1223	Suction Cover	3712	Lock Nut, Bearing	4610.3	O-ring, Wear Plate Nut
		3856	Oil Level Site Gauge		
2100	Shaft			6521	Vent Plug
2200	Impeller	4100	Stuffing Box	6541	Lockwasher
2445	Shaft Sleeve	4120	Gland Half	6569	Plug, Square Head
2510	Spacer, Impeller	4130	Packing	6572.1	Stud, Gland
2540	Deflector	4132	Protector Plate	6572.2	Stud, wear plate
2542	Clamp Ring	4134	Lantern Ring	6580.1	Nut, Gland
		4300.1	Seal, Line Bearing	6580.2	Nut, wear plate
3011	Line bearing	4300.2	Seal, Thrust Bearing	6700.1	Key, coupling
3031	Thrust bearing	4590.1	Gasket, Casing	6700.2	Key, Shaft
3120	Adaptor Support	4590.2	Gasket, Impeller		
3122	Bearing Cartridge	4590.3	Gasket, Sleeve		

8.6 Severe Duty-Frames 3&4 with Expeller

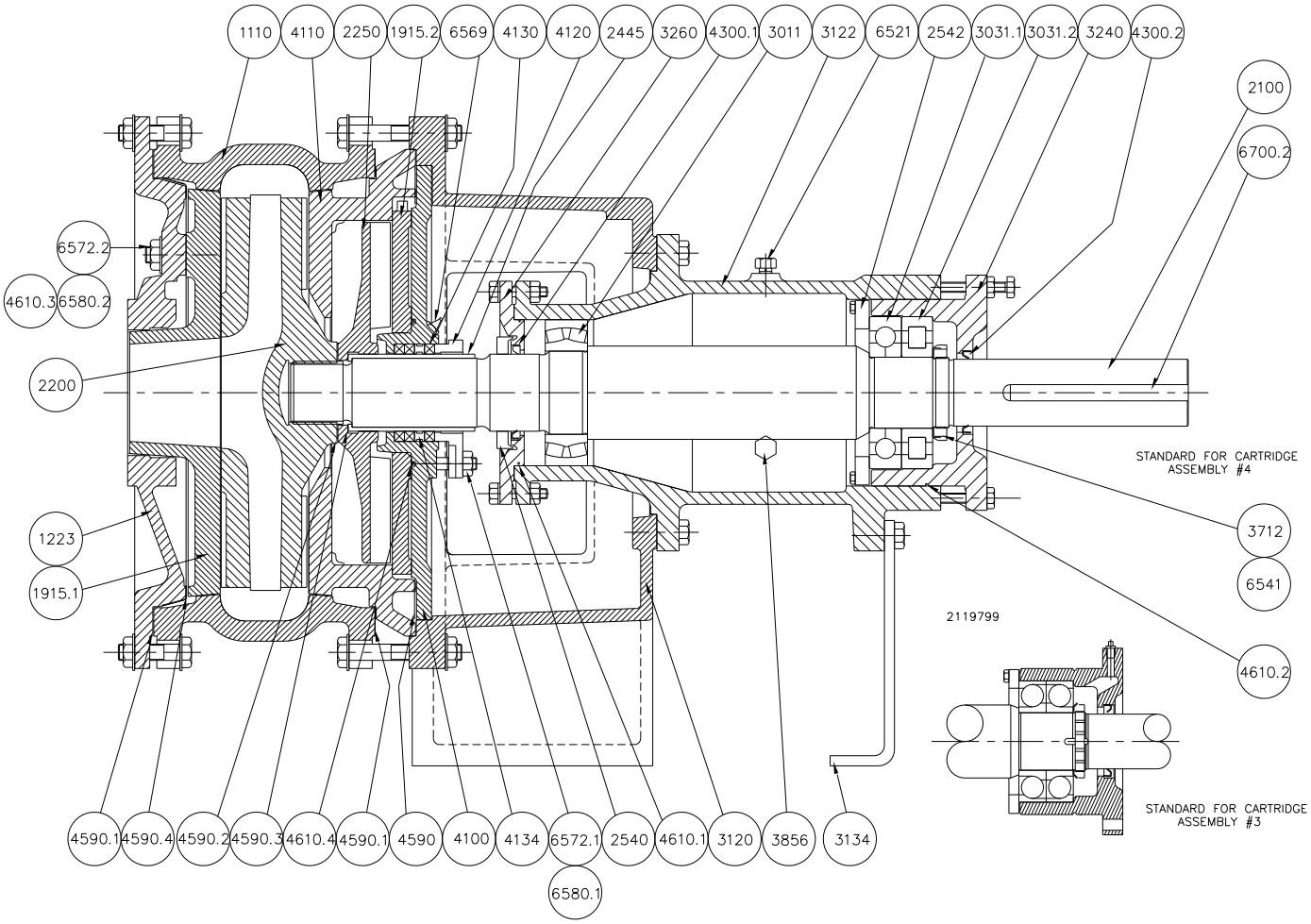

Ref.	Description	Ref.	Description	Ref.	Description
1110	Casing	3134	Support Foot	4590.4	Gasket, Sleeve
1223	Suction Cover	3240	Thrust brg.Hsg.	4610.1	O-ring, Line brg.
1915.1	Wear plate, Suction	3260	Line brg. Cover	4610.2	O-ring, thrust brg
1915.2	Wear plate, Expeller	3712	Lock Nut, bearing	4610.3	O-ring, Expeller WrPlt
		3856	Oil Level Site Gauge		
2100	Shaft			6521	Vent Plug
2200	Impeller	4100	Stuffing Box	6541	Lockwasher
2250	Radial flow impeller, expeller	4110	Housing, expeller	6569	Plug, grease fitting
2445	Shaft Sleeve	4120	Gland Half	6572.1	Stud, Gland
2540	Deflector	4130	Packing	6572.2	Stud, wear plate
2542	Clamp Ring	4134	Lantern Ring	6580.1	Nut, Gland
		4300.1	Seal, Line bearing	6580.2	Nut, wear plate
3011	Line bearing	4300.2	Seal, Thrust Brg	6700.1	Key, coupling
3031	Thrust bearing	4590.1	Gasket, Casing	6700.2	Key, Shaft
3120	Adaptor Support	4590.2	Gasket, Expeller Hsg		
3122	Bearing Cartridge	4590.3	Gasket, Impeller		

8.7 Severe Duty-Frames 5&6

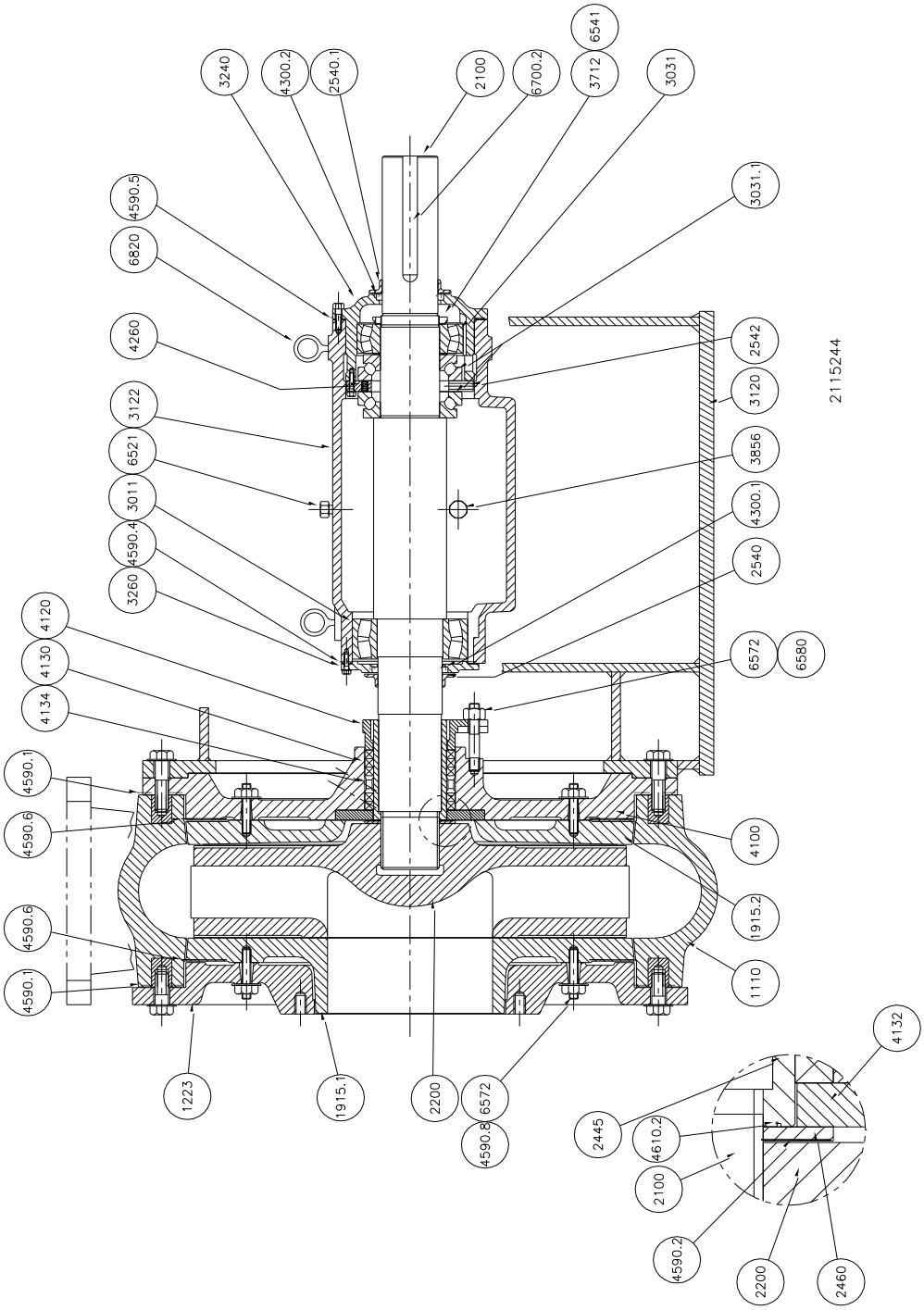

Ref.	Description
1110	Casing
1223	Suction Cover
1915.1	Wear plate, Suction
1915.2	Wear plate, Gland
2100	Shaft
2200	Impeller
2445	Shaft Sleeve
2460	Spacer, Impeller
2540	Deflector
2542	Clamp Ring
2912	Impeller Nut
3011	Line bearing
3031	Thrust bearing
3120	Adaptor Support
3122	Bearing Cartridge
3134	Support Foot
3240	Thrust brg.Hsg.
3260	Line brg. Cover
3712	Lock Nut, bearing
3856	Oil Level Site Gauge
4100	Stuffing Box
4120	Gland Half
4130	Packing
4132	Protector Plate
4134	Lantern Ring
4260	Spring
4300.1	Line bearing seal
4300.2	Thrust Brg.Seal
4590.1	Gasket, Casing
4590.2	Gasket, Impeller
4590.3	Gasket, Sleeve
4590.4	Gasket, Inboard Brg.
4590.5	Gasket, Outboard
4590.6	Gasket, Wear plate
4590.7	Gasket, Stuffing Box
4590.8	Gasket, wear plate
4610.1	O-ring, Line brg.
4610.2	O-ring , thrust brg
4610.3	O-ring, Stuffing Box
4610.4	O-ring, Expeller Hsg.
6521	Vent Plug
6541	Lockwasher
6572	Stud, wear plate
6580	Nut, wear plate
6700.1	Key, Coupling
6700.2	Key, Shaft
6820	Bolt, Eye

8.8 Severe Duty –Frame 5&6 with Expeller

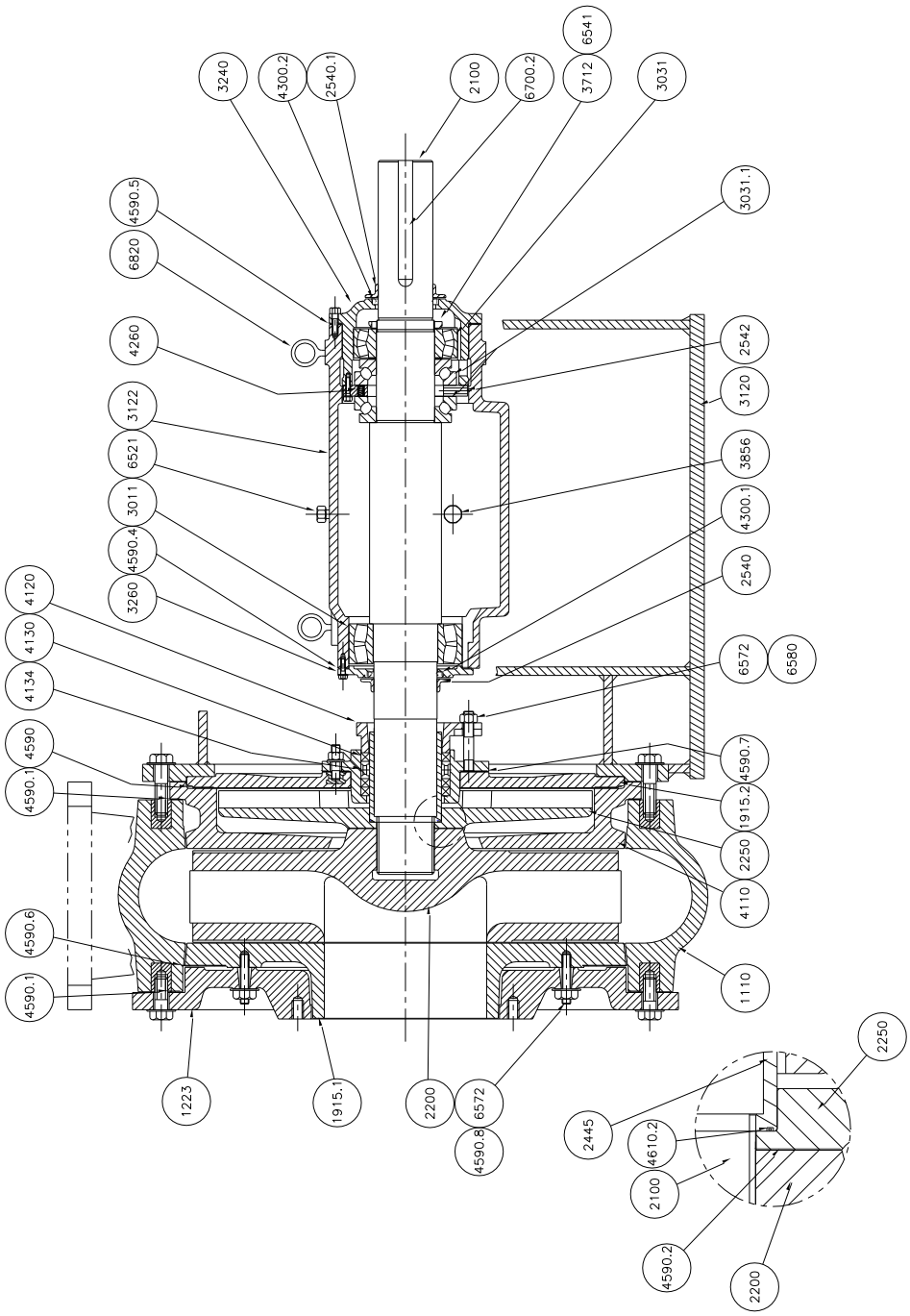

Ref.	Description
1110	Casing
1223	Suction Cover
1915.1	Wear plate, Suction
1915.2	Wear plate, Expeller
2100	Shaft
2200	Impeller
2250	Radial Flow Impeller, Expeller
2445	Shaft Sleeve
2460	Spacer, Impeller
2540	Deflector
2542	Clamp Ring
2912	Impeller Nut
3011	Line bearing
3031	Thrust bearing
3120	Adaptor Support
3122	Bearing Cartridge
3134	Support Foot
3240	Thrust Bearing Housing
3260	Line Bearing Cover
3712	Lock Nut, bearing
3856	Oil Level Site Gauge
4100	Stuffing Box
4110	Housing, Expeller
4120	Gland Half
4130	Packing
4134	Lantern Ring
4260	Spring
4300.1	Line bearing seal
4300.2	Thrust Bearing Seal
4590.1	Gasket, Casing
4590.2	Gasket, Impeller
4590.3	Gasket, Sleeve
4590.4	Gasket, Inboard Bearing
4590.5	Gasket, Outboard
4590.6	Gasket, Wear plate
4590.7	Gasket, Stuffing Box
4590.8	Gasket, wear plate
4610.1	O-ring, Line bearing
4610.2	O-ring , thrust bearing
4610.3	O-ring, Stuffing Box
4610.4	O-ring, Expeller Housing
6521	Vent Plug
6541	Lockwasher
6572	Stud, wear plate
6580	Nut, wear plate
6700.1	Key, Coupling
6700.2	Key, Shaft
6820	Bolt, Eye

8.9 General arrangement drawing

The typical general arrangement drawing and any specific drawings required by the contract will be sent to the Purchaser separately unless the contract specifically calls for these to be included into the User Instructions. If required, copies of other drawings sent separately to the Purchaser should be obtained from the Purchaser and retained with these User Instructions.

9 CERTIFICATION

Certificates, determined from the contract requirements will be provided with this manual. Examples are certificates for CE marking and ATEX marking. If required, copies of other certificates sent separately to the Purchaser should be obtained from Purchaser for retention with the User Instructions. See section 1.9, *Noise level*, for details of typical noise certification.

10 OTHER RELEVANT DOCUMENTATION AND MANUALS

10.1 Supplementary User Instruction manuals

Supplementary instruction determined from the contract requirements for inclusion into User Instructions such as for a driver, instrumentation, controller, sub-driver, seals, sealant system, mounting component etc are included under this section. If further copies of these are required they should be obtained from the purchaser for retention with these User Instructions.

Where any pre-printed set of User Instructions are used, and satisfactory quality can be maintained only by avoiding copying these, they are included at the end of these User Instructions such as within a standard clear polymer software protection envelope.

10.2 Change notes

If any changes, agreed with Flowserve are made to the product after its supply, a record of the details should be maintained with these User Instructions.

10.3 Additional sources of information

Reference 1:
NPSH for Rotordynamic Pumps: a reference guide, Europump Guide No. 1, Europump & World Pumps, Elsevier Science, United Kingdom, 1999.

Reference 2:
Pumping Manual, 9th edition, T.C. Dickenson, Elsevier Advanced Technology, United Kingdom, 1995.

Reference 3:
Pump Handbook, 2nd edition, Igor J. Karassik et al, McGraw-Hill Inc., New York, 1993.

Reference 4:
ANSI/HI 1.1-1.5
Centrifugal Pumps - Nomenclature, Definitions, Application and Operation.

Reference 5:
ANSI B31.3 - Process Piping.

Your Flowserve factory contact:

Flowserve Pump Division
5310 Taneytown Pike,
Taneytown,
Maryland,
USA 21787

Telephone +1 (410) 756 2602
Fax +1 (410) 756 2615

Local Flowserve factory representatives:

In Europe:

Flowserve Sihi (Spain) S.L.
Vereda de los Zapateros C.P.28223
Pozuelo de Alarcon Madrid
Spain

Flowserve Sihi (Spain) S.L.
Avenida de Madrid 67 C.P. 28500
Arganda del Rey Madrid
Spain

Telephone +34 (0)91 709 1310
Fax +34 (0)91 715 9700

FLOWSERVE REGIONAL SALES OFFICES:

USA and Canada
Flowserve Corporation
5215 North O'Connor Blvd.,
Suite 2300
Irving, Texas 75039-5421, USA
Telephone +1 972 443 6500
Fax +1 972 443 6800

Europe, Middle East, Africa
Flowserve FSG – Italy
Worthing S.r.l.
Via Rossini 90/92
20033 Desio (Milan), Italy
Telephone +39 0362 6121
Fax +39 0362 628 882

Latin America and Caribbean
Flowserve Corporation
6840 Wynnwood Lane
Houston, Texas 77008, USA
Telephone +1 713 803 4434
Fax +1 713 803 4497

Asia Pacific
Flowserve Pte. Ltd
10 Tuas Loop
Singapore 637345
Telephone +65 6771 0600
Fax +65 6862 2329

Visit our web site at: www.flowserve.com