USER INSTRUCTIONS

Installation
Operation
Maintenance

Valtek® NR Diaphragm Rotary Actuator

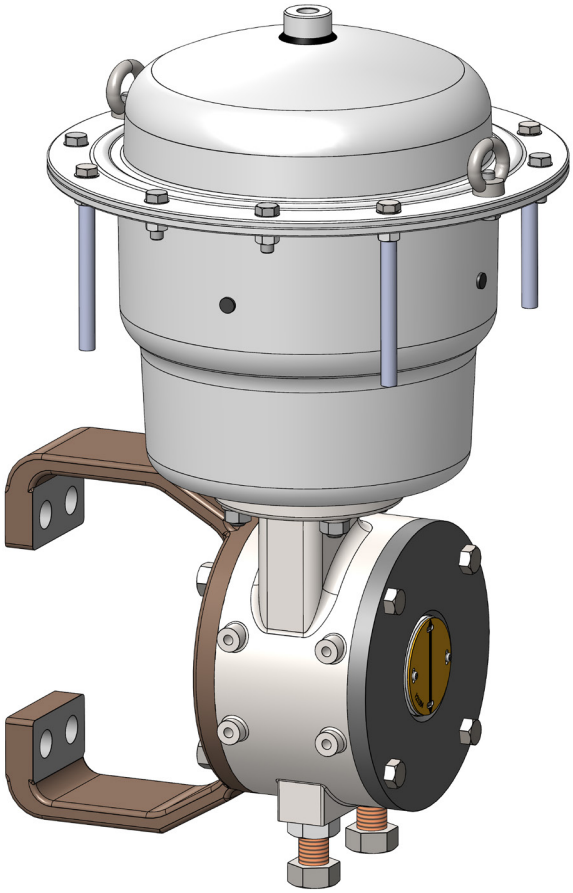

Experience In Motion

NR Diaphragm Rotary Actuator

NR Diaphragm rotary actuators has a flexible diaphragm, placed between two casings. The upper diaphragm case is designed as pressure tight. The lower diaphragm case holds a spring opposing the force generated within the pressure chamber of actuator. The controlled air supply is connected to the upper diaphragm case, and an increase or decrease of the air pressure results in a rotation and positioning of valve stem. This kind of actuator is called single acting with spring return positioning force converted by a lever from a linear motion to a rotary motion. The rotation angle is limited to 60 or 90-degrees options. The lever is installed and guided in a case, called transfer case. The transfer case is designed so that the actuator can be assembled in two configurations, thus allowing two fail safe positions, fail close or fail open. Simplicity of design reduces maintenance and parts inventory costs. It is ideally suited for flow and pressure control of liquid and gas media in oil and gas, power, chemical and petrochemical processing, and related industries. The Valtek® NR Actuator is manufactured according to ISO 9001 standards.

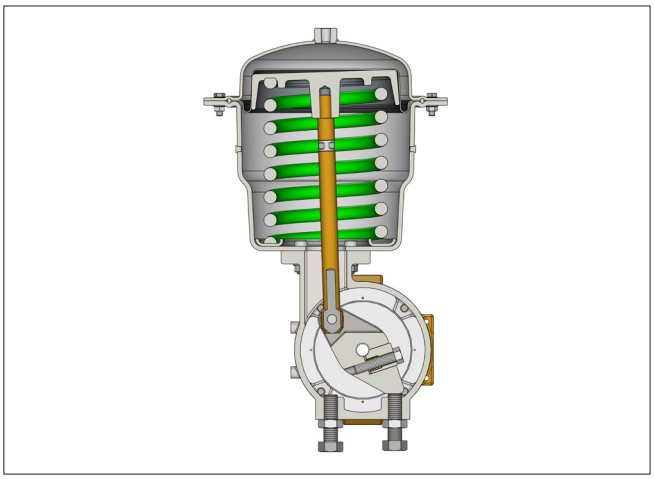

Figure 1: Valtek ® NR-Actuator

The following instructions are designed to assist in unpacking, installing, and performing maintenance as required on the NR diaphragm rotary actuators. This instruction manual does not include specific product technical data. Such data can be found on the actuator's serial plate or specification documents; additionally, dimensional information can be found in the NR technical bulletin. Procure needed documents as necessary before you begin any work on the valve.

User Instructions cannot deal with all possible situations and installation options. It is required that only trained and qualified technicians are authorized to adjust, repair or work on NR diaphragm rotary actuators, positioners, and other accessories. Review this bulletin prior to installing, operating or performing any maintenance on the actuator. Additional Installation, Operation, and Maintenance Instructions (IOMs) cover other features (such as positioners and other accessories).

To avoid possible injury to personnel or damage to actuator parts, WARNING, CAUTION and NOTICE indicators must be strictly followed. Modifying this product, substituting non-factory parts, or using maintenance procedures other than outlined could drastically affect performance and be hazardous to personnel and equipment and may void existing warranties. This manual should be used in conjunction with applicable local and national laws. Failure to comply with User Instructions will render the manufacturer's guarantee and liability null and void. Unless otherwise agreed, the manufacturer's general terms and conditions of sale shall apply.

Read the user instructions carefully before use. Keep for future reference.

Contents

1. Scope of Manual
2. Intended Use
3. Product Identification
4. NR Modification
5. Safety
6. Packaging and Transport
7. Storage
8. Unpacking
9. Installation
10. Assembly on valve
11. Actuator Quick-Check
12. Actuator Maintenance
13. Troubleshooting
14. Disassembly and Reassembly
15. Torque Requirements
16. Lubricants
17. Disposal
18. Parts List

1. Scope of Manual

The following user information covers the NR diaphragm rotary actuator:

- For MaxFlo, Valdisk, ShearStream only
- Size NR 25, NR 50, NR 100 for Valve Sizes From NPS 1" to 16" or DN 25 to DN 400
- Comes with or without ancillary equipment.

2. Intended Use

⚠ WARNING Diaphragm rotary actuators are pressure vessels designed and rated for specific application conditions. Before installation, check the serial number and / or the tag number to ensure that the valve and actuator being installed are correct for the intended application. Do not use the valve assembly outside of its rated design limits. Exceeding the design limits may cause hazardous conditions including leakage of the process media or rupture of the pressure boundary resulting in possible process loss, equipment or environmental damage, or serious personal injury or death.

The specific product design data can be found on the actuators serial plate, data sheet and the specification sheet. The NR actuator handles a wide variety of general service applications. The NR actuator consists of the actuator, transfer case, yoke and connecting parts. The actuator is designed with a high level of interchangeability allowing the user to assemble the greatest possible number of variations from a minimum number of components to match each application. There are two fail safe positions, fail close or fail open without or with handwheel.

The NR actuator is designed for use in MODERATE and WORLDWIDE environmental conditions, ambient temperature range -22°F to 158°F (-30°C to +70°C), and low temperature range -67°F to +158°F (-55°C to +70°C) air humidity up to 93% non-condensing, air pollution up to 300 µg/m^3, unless restricted by the accessories.

The product offering may include optional ancillary equipment, such as positioners, air-filter regulators, solenoid valves, limit switches or boosters. Digital, I/P, or pneumatic positioners can be mounted with a mounting bracket. Refer to the relevant manufacturer's user instructions for information regarding other ancillary equipment.

3. Product Identification

Each NR diaphragm rotary actuator comes with an attached serial plate which includes key information specifically for each actuator.

The same serial number shown on the plate will appear on all NR actuator data sheets, dimensional drawings, bills of material, and spare parts lists. Other information located on the serial plate.

Users can download pdf versions of the NR documentation including a sales brochure, technical bulletin, and user instructions at www.flowserve.com. It is the user's responsibility to keep this and related documentation on file and accessible for the NR product.

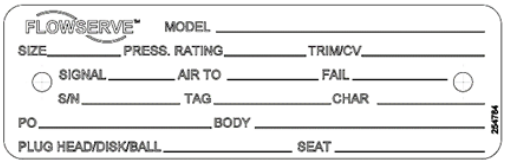

Figure 2: Serial Plate

4. NR Modification

NR diaphragm rotary actuators are generally delivered as tested and assembled units.

Unauthorized modification of the NR diaphragm rotary actuator voids the product test certification and product warranties, could drastically affect product performance, and could be hazardous to personnel and equipment.

NOTICE Before NR re-use, all necessary tests must be repeated and recorded in compliance with all test routines, guidelines, and engineering standards.

5. Safety

Safety terms – WARNING, CAUTION and NOTICE - are used to highlight specific dangers and / or provide additional information that may not be readily apparent in the User Instructions.

WARNING directions must be strictly followed.

⚠ WARNING or WARNING indicates that ⚠ severe personal injury, death and substantial property damage can occur if proper precautions are not taken.

⚠ CAUTION CAUTION Indicates that potential injury (minor or moderate) or equipment damage can occur if proper precautions are not taken.

NOTICE NOTICE indicates practices or provides additional technical information.

Grey fields indicate safety-related information.

6. Packaging and Transport

Pay close attention to shipping marks and transport pictograms.

Careful packing, loading and transport arrangements are required to prevent products from being damaged during transport. Standard packaging includes a cardboard box, with or without a wooden pallet base as needed. Special packaging may include a wooden box. Packaging may use cardboard, plastic wrap, foam, or paper as packing material. Filling material may be a carton type or paper.

Shipping marks display product and package dimensions and weight (for further information see Packaging and Sending Instructions, Form L 002). Packing guidelines for export follow HPE standards. (Nonreturnable packaging may contain up to 90% recyclable materials).

7. Storage

Maximum storage time for diaphragm rotary actuators is 2 years at 25 °C.

NOTICE Rubber become brittle, lubricants become resinous, also refer ISO 2230.

Upon receipt at site, store the NR actuator on a solid base in a cool, dry closed room. Until its installation, the actuator must be protected from the weather, dirt, and other potentially harmful influences.

Do not remove the protective covers from the air supply connection of the actuator or from the instrument and accessories until the actuator is ready for installation at the site.

NOTICE It is not advised to place the diaphragm case assembly or valve on its side to prevent damages to long bolts. (see Figure 3)

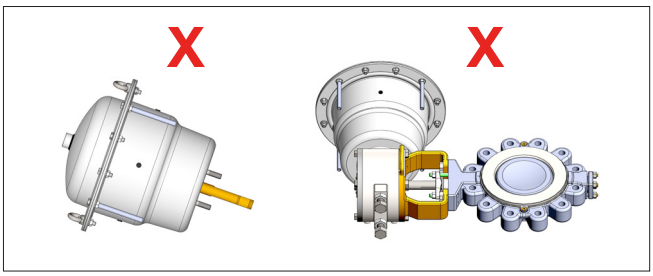

Figure 3: Diaphragm case assembly and valve lies on the ground

It is advised to place the diaphragm case assembly or valve as shown in the picture to prevent bends on long preload bolts. (see Figure 4)

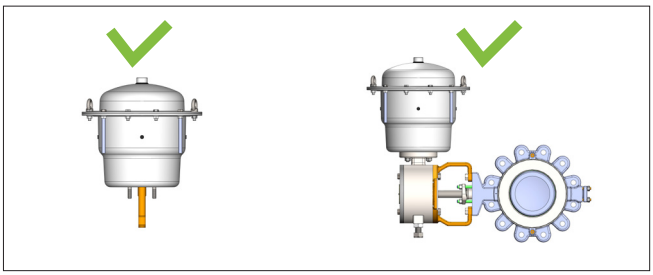

Figure 4: Diaphragm case assembly and valve standard practice

8. Unpacking

Hoisting and lifting are inherently dangerous activities and require safe rigging and proper training to mitigate hazards. Use standard industry safety practices, personal protection, and warranted lifting devises.

WARNING Crushing hazard! Arrange rigging to prevent tipping of the actuator. Do not allow the actuator assembly to rotate during removal. Do not stand under suspended loads. Failure to do so can cause serious personal injury and damage the actuator or nearby equipment.

NOTICE Be aware that the center of gravity may be above the lifting point. Do not allow the sling to touch the stem, travel indicator or peripheral equipment. Observe the maximum permitted carrying capacity.

1. Check the packing list against materials received to ensure all components and accessories are present.
2. Place a sling around the actuator case just above the transfer case.
3. You can alternatively hook a double-leg sling into the lifting rings mounted on the actuator.

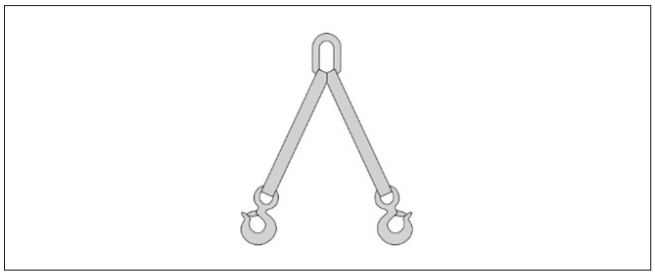

Figure 5: Double Leg Swing

4. Upon removing the actuator from the packaging, we recommend that you:

- Promptly touch up any damage to the corrosion protection.
- Contact your shipper immediately to report any damage.
- Call your Flowserve representative if you experience any problems.
- Do not remove the protective covers from the air supply connection of the actuator or from the instrument ports of the actuator and accessories until the actuator is ready for installation at the site.

9. Installation

The actuator must be installed and commissioned by qualified staff - personnel who are familiar with the installation, commissioning and operation of this product and possess the relevant qualifications in their field of activity.

⚠ Prior to installation of the actuator, we require, that you check the following conditions to reduce the risk of malfunction and safety related incidents.

<table>
<tr><th>No</th><th>Check</th><th>Possible malfunction or safety related incident</th></tr>
<tr><td>1</td><td>Confirm that the nominal / operational data on the serial plate matches the operational data of the facility.</td><td>An operational mismatch can cause considerable damage the actuator or may lead to a failure at the facility.</td></tr>
<tr><td>2</td><td>Confirm that the air supply and instrument signal lines are dry and clear of dirt and oil.</td><td>At a minimum, the instrument air must conform to ISA- 7.0.01-1996 (ISO 8573-1 Compressed Air - Class 2) requirement or those of the accessory manufacturer.</td></tr>
<tr><td>3</td><td>Confirm that the actuator can be installed in an upright position the valve with horizontal shaft whenever possible.</td><td>Non-upright positioning may result in premature wear.</td></tr>
<tr><td>4</td><td>Confirm that a suitable yoke for attachment to the valve and all coupling parts are present.</td><td>Mismatch of yoke attachment can cause damage to the actuator parts.</td></tr>
<tr><td>5</td><td>Confirm that the valve shaft and actuator lever matches.</td><td>Mismatch between the valve shaft and actuator lever can damage the actuator and valve parts.</td></tr>
<tr><td>6</td><td>Confirm the actuator has enough overhead clearance to disassemble the valve from the pipeline.
<table>
<tr><th rowspan="2">Actuator size</th><th colspan="2">E (Disassembly clearance)</th></tr>
<tr><th>in</th><th>mm</th></tr>
<tr><td>NR 25</td><td>6.0</td><td>152</td></tr>
<tr><td>NR 50</td><td>8.0</td><td>203</td></tr>
<tr><td>NR 100</td><td>11.0</td><td>279</td></tr>
</table>
Table 2: Overhead clearance dimension</td><td>It is not possible to remove the actuator from valve if there is no sufficient clearance.
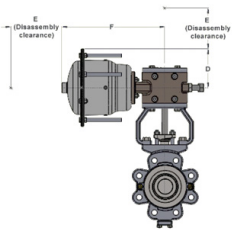

Figure 6: Overhead clearance drawing</td></tr>
<tr><td>7</td><td>Confirm removal of all hazards and ensure appropriate protective measures are in place.</td><td>none</td></tr>
<tr><td>8</td><td>Confirm the valve is grounded to prevent an electrical discharge.</td><td>Noncompliance may result in electrical discharges.</td></tr>
<tr><td>9</td><td>Throttling control valves are typically equipped with a pneumatic actuator and valve positioner. Refer to the appropriate positioner manual for connections and maximum air supplies.</td><td>The air supply must be limited per the actuator serial plate. An air filter regulator should be installed to ensure that the supply pressure to the pneumatic actuator does not exceed the air supply pressure indicated on the serial plate.</td></tr>
</table>

Table 1: Basic safety massages for installing the actuator.

After these requirements are confirmed, the actuator can be installed and connected to the valve.

10. Assembly on valve

The NR diaphragm rotary actuator is allowed to be assembled and reassembled only by qualified staff personnel who are familiar with assembling, reassembling, installation, and commissioning of this product, and possess the relevant qualifications in their field of activity.

WARNING Diaphragm rotary actuators are pressure vessels. Improper opening of the actuator can result in bodily injury.

Actuator assembly procedure

1. Fix the valve on the assembly table.

   NOTICE The orientation of the valve must be in accordance with the mounting orientations.

2. Lubricate all threads with a suitable, approved lubricant. (See Section 16)
3. Mount the actuator on the valve. The yoke washer (112, if available) and hex head bolts (107) onto the valve body.

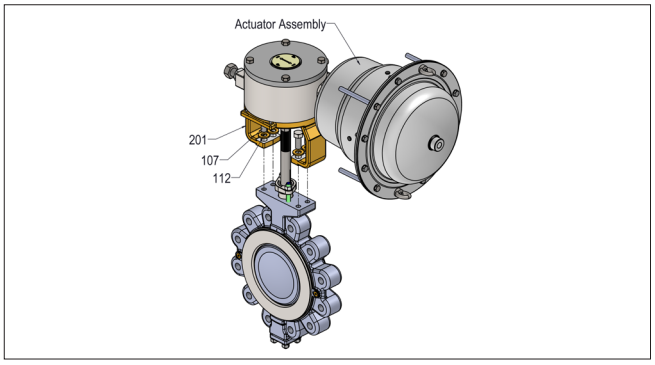

Figure 7: Actuator assembly drawing

4. Finger-tighten and torque to the requirements. (See Section 15: Torque Requirements).
5. Remove the cover plate bolts (337) and the cover plate (363).

On clamping lever-arm CAUTION actuators, do not apply air to the actuator without the cover plate installed; otherwise, the unsupported shaft may sustain damage.

6. Position the actuator lever arm on the shaft so the actuator stem is centered in the transfer case. Firmly tighten the linkage bolt, on clamping lever arm actuators.
7. Install the cover plate (363) and the cover plate bolts (337).

CAUTION Actuator stroke stop bolts must be properly adjusted to prevent the valve disk / ball from over stroking. If incorrectly adjusted the valve shaft may be twisted or sheared off when it contacts the body stop.

8. Adjust the actuator stroke stop bolts until the disk / plug / ball is parallel to the seat surface.
9. Perform one full stroke and check the correct setting by the stroke plate or position indicator.

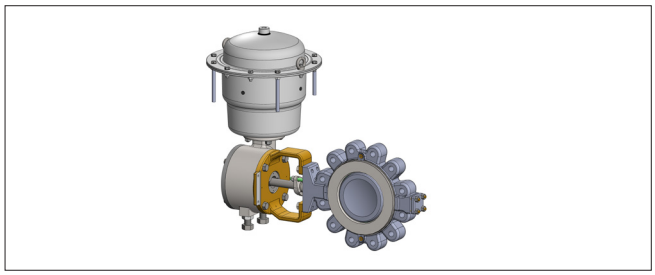

Figure 8: Final assembly drawing

Seat self-centering procedure

See valve IOM for seat installation procedure for centering of the disk / plug / ball.

Reassemble the valve into the pipe

1. Remove the protective flange covers and coating from the control valve; clean the flange gasket surface.

   Unsuitable cleaning agents can damage and cause leakage in PTFE and graphite gaskets. Consult a current chemical resistance list before applying.

2. Install the actuator in an upright position whenever possible. Vertical installation permits easier actuator maintenance. (see Figure 7).
3. Install and connect the control valve to the pipeline. Locate gaskets in the center of the body flanges and secure nuts and bolts.
4. Ensure there is sufficient clearance between pipe ID and disk or ball OD.
5. For pneumatic actuators, connect the air supply and instrument signal lines.

NOTICE The actuator has rubber plugs (436). These plugs function as a vent. Remove the lowermost plug to drain out the actuator!

11. Actuator Quick-Check

Use appropriate personal protective equipment when working on the actuator or control valve to prevent hazards arising from the operation. Protect yourself against freezing, burns and cuts by wearing appropriate protective clothing, gloves and eye protection.

Do not over-tighten packing. Sudden exposure of the control valve to full working pressure and temperature may cause stress cracks.

⚠ Prior to valve operation, we require, that you check the following conditions to reduce the risk of malfunction and safety related incidents.

No	Important information	Possible malfunction or safety related incident
1	Avoid critical operating conditions where excessive noise or vibration levels might occur.	Impermissible continuous operation of a control valve under critical conditions can damage the valve.
2	Avoid frequent system start-ups and shutdowns.	Critical operating conditions, which can damage the control valve, may be encountered during system start-up or shut down.
3	Keep the operating medium free of foreign particles.	Installing a suitable strainer upstream of the control valve can prevent foreign particles from damaging the valve.
4	Instrument air must conform to ISA 7.0.01-1996 (with a dew point at least 18°F (10°C) below ambient temperature, particle size below 1 µm and oil content not to exceed 1 ppm)	Contaminated instrument air can damage the accessories and diaphragm rotary actuator or cause them to fail.
5	⚠ Do not touch the body, bonnet and yoke! The temperature of the operating medium is transferred to the surface of the rotary actuator.	Excessive hot surface temperatures can put you at risk for burns. Frigid surface temperatures can put you at risk for freezing.
6	⚠ Critical operating conditions can cause excessive or hazardous levels of vibration or noise.	Impermissible levels of vibration can cause hearing loss, vascular and nerve damage and damage to joints and bones. Use hearing protection when noise levels exceed 80 dB(A).
7	⚠ Incorrect maintenance can result in the emission of hot, cryogenic, and / or toxic operating media.	Incorrect maintenance can put you at risk for heat related burns, freezing, acid burns or poisoning.

Table 3: Basic safety massages for operating the valve.

WARNING Due to risk of crushing hazard, do not work between the yoke legs while the valve is in operation.

Prior to start-up, we strongly recommend that you:

1. Stroke the valve and compare the plug position indicator on spline lever to the stroke indicator plate. The plug should change position in a smooth, linear fashion.

NOTICE Graphite packing commonly creates more friction than other materials, such as PTFE. If over tightened, excessive friction may impair smooth control

2. Adjust instrument signals to ensure a full stroke.
3. Check the packing box bolting to ensure the correct adjustment.

NOTICE Over tightening can cause excessive packing wear and high stem friction that may impede plug movement.

4. Continuously increase load until operation parameters are reached.
5. Minor relaxation of the bonnet bolting is possible after initial assembly. Retorque the bonnet (or extended bonnet) bolting, if necessary, before installation or following an initial temperature excursion to ensure thebonnet gaskets do not leak.

12. Actuator Maintenance

Maintenance intervals and service life of an actuator can only be determined empirically on site. The intervals specified in the User Instructions are recommendations and serve only as a guide. Under problematic operating conditions, maintenance intervals may be significantly reduced. We strongly recommend a site survey followed by establishing a documented procedure for performing the maintenance work. Maintenance personnel should perform and log the work accordingly. The data collected can be used as a basis for dynamically determining the maintenance intervals and activities.

Recommended Maintenance Actions					
No	Service	Interval	Valve Condition		
			Good	Adequate	Inadequate
1	Visual inspection of the actuator	Bi-weekly	No action	Clean actuator with a soft cloth	Overhaul or replace actuator after product lifecycle
2	Visual inspection of the tightness	Bi-weekly	No action	Retighten leaky air supply, case bolting	Replace leaky air supply, diaphragm immediately
	Preventive change of the diaphragm		Dependent upon results of previous maintenance (see numbers 1 and 2 above) or a minimum of once every 5 years		
3	Visual inspection of case bolting	Yearly	No action	Retighten case bolting if diaphragm leaks externally.	Remove from service and replace case bolting, diaphragm immediately if external leakage persists or if bolting is damaged
4	Operation test		No action	Perform 3 full strokes using air supply and / or case bolting is modified: check for leakage	

Recommended maintenance actions using the Logix digital positioner with Valve Sight diagnostic solution software					
5	Visual inspection of diagnostic interface	Weekly	No action- valve is healthy	Take action per warning	Overhaul or replace required part per alarm
6	Check health parameter of actuator	Warning	No action- actuator is healthy	Check and retighten air supply	Overhaul or replace actuator after alarm
7	Check health parameter of positioner	Warning	No action- positioner is healthy	Start step test	Overhaul or replace positioner after alarm

Table 4: Service activities check list.

⚠ Prior to valve maintenance, we require, that you check the following conditions to reduce the risk of malfunction and safety related incidents.

No	Check	Possible malfunction or safety related incident
1	Check for signs of leakage through the case bolting and end flanges.	Tighten the case bolting nuts. See Section 14: Disassembly and Reassembly for instructions. Also see Section 15.
2	Check if all nuts and bolts are securely fastened.	⚠ Avoid critical operating conditions if excess noise or vibration levels occur during operation.
3	Check valve for smooth, full-stroke operation. Unsteady stem movement could indicate an internal valve problem.	Internal valve failure requires an immediate overhaul or rotary actuator replacement by qualified stuff.

Table 5: Basic safety massages for maintenance the valve

WARNING Crushing hazard! Failure to keep hands, hair, and clothing away from all moving parts when operating the control valve can cause serious injury.

1. Clear all dirt and / or foreign material from the shaft and control valve.
2. If leakage is detected, retighten the bolting.
3. Activities on the valve, see separate valve IOM document.
4. Make sure all nuts and bolts are securely fastened.
5. If possible, stroke the valve and check for smooth, full-stroke operation. Unsteady stem movement could indicate an internal valve problem.
6. Make sure all accessory brackets and bolting are ecurely fastened.
7. Check control valve health parameters:
   - Characteristic curves of the valve with flow
   - Upstream pressure
   - Downstream pressure

in the control room.

NOTICE Monitor trim and bonnet components. If nominal and actual values differ by more than 5%, an overhaul may be required.

13. Troubleshooting

Maintenance intervals and service life of an actuator can only be determined empirically on site. The intervals specified in the User Instructions are recommendations and serve only as a guide. Under problematic operating conditions, maintenance intervals may be significantly reduced. We strongly recommend a site survey followed by establishing a documented procedure for performing the maintenance work. Maintenance personnel should perform and log the work accordingly. The data collected can be used as a basis for dynamically determining the maintenance intervals and activities.

Contact customer service department or contract partner for any fault or defect found, otherwise the manufacturer's guarantee shall be rendered null and void and the manufacturer released from any responsibility. If the user performs the repairs, these User Instructions must be adhered to and carried out in a competent manner. Original Equipment Manufacturer spare parts must be used to make the repair.

Defect	No	Possible causes	Remedy
Shaft does not move	1.1	• No auxiliary energy supply (pneumatic air) to actuator and accessories (positioner, air filter regulator, solenoid valve, limit switch, and/ or special accessories)	• Pneumatic actuators: Check supply for leaks. Check air pressure per serial plate Figure 2
	1.2	• Mounted accessories do not work	• See the user instructions of the accessory manufacturer
	1.3	• Pneumatic actuator is defective	• Contact customer service department or contract partner
Jerky stem movement	2.1	• Damaged shaft	• Contact customer service department or contract partner
	2.2	• Actuator not powerful enough	• Compare actuator specifications on the serial plate with operation specifications of the facility. If incompatible, contact customer service department or contract partner
Shaft travel less than full stroke (0 to 100 %)	3.1	• Air supply pressure too low	• Provide air at the pressure stated on the serial plate (European production only).
	3.2	• Pneumatic actuators: Improper handwheel position	• Move handwheel to limit position, otherwise contact factory for information.
	3.3	• Improperly adjusted or defective positioner	• Readjust positioner to positioner manufacturer's specification
	3.4	• Foreign particles in valve seat or damaged trim	• Contact customer service department or contract partner

Defect	No	Possible causes	Remedy
No limit switch signal	4.1	• Power supply to limit switch interrupted	• Check power supply (connections, circuit breakers, voltage)
	4.2	• Limit switch out of adjustment	• Readjust limit switch operating distance; see limit switch data sheet
Unstable positioner	5.1	• Defective positioner	• See user instruction of the positioner manufacturer

Table 6: Trouble-shooting

14. Disassembly and Reassembly

The rotary actuator or control valve is allowed to be disassembled and reassembled only by qualified staff - personnel who are familiar with disassembling, reassembling, installation and commissioning of this product, and possess the relevant qualifications in their field of activity.

When performing repairs, personnel are to follow these instructions using only original equipment manufacturer (OEM) spare parts and recommended special tools to ensure the reliability of the rotary control valve.

Only Flowserve trained and authorized personnel are allowed to repair (disassemble and reassemble) the rotary actuator or control valve in hazard areas.

Valves for oil and grease-less service or oxygen service only be disassembled and reassembled in clean rooms (ISO 14644- ISO 8, US FED STD 209 E - M 6.5, or equivalent).

⚠ WARNING **Control valves are pressure vessels. Improper opening of the valve or actuator can result in bodily injury.**

⚠ **Prior to disassemble and reassemble, we require, that you check the following conditions to reduce the risk of malfunction and safety related incidents.**

No	Important Information	Possible malfunction or safety related incident
1	Disregarding these instructions may bring serious or harmful consequences.	Failure to comply with these user instructions will render the manufacturer's guarantee and liability null and void. Unless otherwise agreed, the manufacturer's general terms and conditions of sale shall apply.
2	⚠ Always observe system safety instructions when preparing for and performing the repair procedure.	Potential hazards and their sources are under the operator's influence. The operator must observe national and international environmental regulations for control valve removal from the pipe and cleaning. Permissible exposure limits must be maintained, appropriate personal protective equipment must be used, and service personnel must be properly instructed in performing the repair procedure.
3	⚠ Make sure the pipeline is depressurized an in ambient state, also a suitable rigging (e.g. Endless Sling) and securing devices (e.g. Vee Trough with Stands / Vise) are readily available.	Remove the rotary valve from the pipeline in a depressurized and ambient state. Failure to do so can cause serious personal injury. The control valve is not equipped with integral stands, therefore guard against the valve from tipping over. Bodily injuries can be the result. Use appropriate clamps, blocking or other stabilizing support. Attachment to overhead crane can ensure stability.
4	Confirm that you have the required spare parts at the site.	Not having the full complement of parts, accessories and tools can slow or stop repair work.
5	⚠ Confirm that you have the required tools available to manage the disassembly and reassembly.	Improper tools and / or improper use of tools can result in personal injury or damage to the parts.
6	Review the serial plate information to identify the actuator. The serial number and the part numbers needed are required when ordering spare parts.	A serial plate used for product identification is attached on every control valve (See Section 3: Product Identification).
7	Check all parts for damage such as scoring, deformities, corrosion, or overexpansion.	If in doubt, replace faulty parts. Never reuse gaskets.

Table 7: Basic safety massages for repairing the control valve.

After these requirements are confirmed the control valve can be maintained and repaired.

Description of the Procedure

⚠WARNING Actuators are pressure vessels. Improper opening of the actuator can result in bodily injury. The steps described should only be performed when a transfer case is mounted.

1. Make a marking to indicate the position of lever and shaft for reassembling.
2. Remove the cover plate bolts (337) and cover plate (363) or handwheel kit. Loosen the linkage bolt, on clamping lever arm actuators.
3. Install the cover plate (363) and cover plate bolts (337). Finger-tighten the cover plate bolts (337).
4. Remove the yoke bolts (107) and lift off the actuator.

Disassembly instructions of the actuator assembly

1. Position valve vertically.
   - The diaphragm box can be removed and replaced, if required.
   - If a spring set change is desired, it is recommended that the entire diaphragm box be changed out.
2. Make sure the stopper bolt (See #330, 347 Limit Stop bolts and nuts) and spline lever (See Kit #249 Lever Sub-Assembly) are engaged.
   - Make sure the stopper bolt is engaged with the spline lever, so the spring is applying force to the stopper bolt.
   - This stopper bolt will hold the diaphragm plate in place.
3. Remove cover plate or handwheel kit.
   - Remove the bolts (337) in the cover plate and remove the cover plate (363).
   - Loosen the linkage bolt, on clamping lever arm actuators.
   - Add the cover plate and bolts in place. Finger tight the cover plate bolts (337).
4. Remove the yoke bolts.
   - Remove the yoke bolts (107) and washer (112, if available).
5. Remove the actuator from the valve along with the actuator yoke.
6. Remove cover plate or handwheel kit and yoke.
   - Remove the bolts (337) in the cover plate and remove the cover plate (363).
   - Remove the bolts (336) in the yoke and remove the yoke (201).
7. Loosen the stopper bolts (330) and back them out a few turns.
8. Position the actuator at mid stroke by using a regulated air supply and remove the spline lever pin snap ring (359).
9. Remove the spline lever pin (361)
   - This will separate the actuator stem (227) and the spline lever assembly (249).
   - This will keep actuator stem perpendicular to transfer case without tilting movement and help to center the diaphragm.
10. Remove the air supply.
11. Remove the transfer case nuts (256) and washer (261).
12. Remove the short diaphragm case nuts (351) and bolts (335) first.
    - As a safety precaution, remove the small diaphragm case nuts (351) and bolts (335) first, then remove the thread covers off the long bolts (334).
13. Apply a generous amount of lubricant to the long spring compression bolts (334)
    - It is recommended to lubricate the long spring compression bolts (334).
    - Loosen each nut (351), 4 or 5 times in a crisscross pattern to the next bolt and nut. Gradually separating the upper and lower diaphragm case halves.
14. Remove the upper diaphragm case (215)
15. Remove the diaphragm (225) from the diaphragm plate (227).
    - Peel the old diaphragm (225) off the diaphragm plate.
    - Notice that the diaphragm (225) is glued to the diaphragm plate assembly (227).
16. Clean the glue from the diaphragm plate.
    - Clean the glue off the diaphragm plate (227).
    - Clean the glue from the diaphragm holding groove in the upper diaphragm case (202) and lower diaphragm case (215).

Reassembly instructions of the actuator assembly

17. Apply the glue (for glue type refer to assembly procedure document) to the diaphragm (225)
    - Apply glue to the new diaphragm (225).
    - Place the diaphragm (225) onto the diaphragm plate (227) and rotate it back and forth several times to evenly distribute the glue over the surface of the diaphragm plate.

- Allow the glue to set for 3 minutes. Curing time 15 minutes is recommended before pressure testing or cycling the actuator.
- Ensure the spring guide plate (326) in-place.
- Replace the spring (229) if needed.
- Place diaphragm assembly (227) in-place.
- Ensure the actuator stem (flat face) in the correct position.

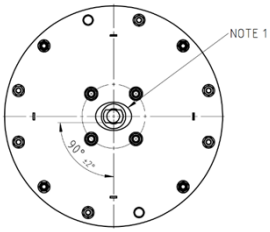

NOTE 1 MAINTAIN ELIPTICAL HOLE AND ACTUATOR STEM INLINE AS SHOWN IN ABOVE.

18. Install the diaphragm case (215)
    - Install the upper diaphragm case (215).
    - Line up the bolt holes.

Use lubricant on the long ⚠WARNING threads to avoid galling, simplifies spring compression.

19. Apply a generous amount of lubricant to the long spring compression bolts (334)
    - It is recommended to lubricate the long spring compression bolts (334).
    - Tighten each nut (351), 4 or 5 times in a crisscross pattern to the next bolt and nut. Gradually connect the upper and lower diaphragm case halves.
    - Tighten the nuts (351) in four steps - 30%, 60%, 100%, and all around 100% - using a crisscross pattern. (see Section 15: Torque Requirements)
20. Install the short diaphragm case nuts (351), bolts (335) and ring nut (209).
21. Mount it on the transfer case (204)
    - Install the stud (206) into the lower diaphragm case.
    - Install washer (261) and nut (256). (see Section 15: Torque Requirements)

NOTICE Lubricate all threads, pin and snap ring with a suitable, approved lubricant. (see Section 16)

22. Place the spline lever inside the transfer case.
23. Position the actuator at mid stroke by using a regulated air supply and install the pin (361) and snap ring (359).
24. Install the yoke (201) and bolts (336).
25. Install the cover plate or handwheel kit (363) and bolts in place. Finger tight the cover plate bolts (337).
26. Readjust stopper bolts or limit stop (330) as needed (see Table 8).
27. Install the plastic pipes (333)and plugs (436).
28. Perform 3 full strokes and check the actuator for smooth and full-stroke operation.
29. Log the maintenance interval and the work performed.

Reassemble the actuator on valve:

1. Mount the actuator on the valve.
2. Mount the flat washer (112, if available) and tighten the hex bolts (107) clockwise.
3. Remove the cover plate bolts (337) and cover plate (363). Firmly tighten the linkage bolt, on clamping lever arm actuators.
4. Install the cover plate or handwheel kit (363) and cover plate bolts (337).

Changing the Air Action:

⚠WARNING Follow all steps carefully, actuator spring is under compression.

1. Position valve vertically.
    - It is easier to change the air action with the valve in this position.
2. Remove cover plate or handwheel kit.
    - Remove the bolts (337) in the cover plate and remove the cover plate (363).
    - Loosen the linkage bolt, on clamping lever arm actuators.
    - Add the cover plate and bolts in place. Finger tight the cover plate bolts (337).
3. Remove the yoke bolts.
    - Remove the yoke bolts (107) and washer (112, if available).
4. Position the actuator at mid stroke by using a regulated air supply.
5. Loosen the stoper bolts (330) and back them out a few turns, but they do not need to be removed.
6. Remove the actuator / yoke bolts (336) and cover plate bolts (337).
7. Flip the actuator assembly (202) as required (fail open or fail close).
8. Install the yoke (201) and bolts (336) as required orientation.
9. Install cover plate (363) and bolts (337).
10. Adjust the stopper bolts (330) as needed.
11. Mount the actuator on the valve.

12. Remove cover plate or handwheel kit.
    - Remove the bolts (337) in the cover plate and remove the cover plate (363).
    - Firmly tighten the linkage bolt, on clamping lever arm actuators.
    - Add the cover plate and bolts in place. Firmly tighten the cover plate bolts (337).

Actuator Size	For 90 deg	
	Fail close / Fail open	
	Dim "A" lever side (mm)	Dim "B" actuator stem side (mm)
NR 25	28.12	33.01
NR 50	28.44	30.16
NR 100	41.63	45.66

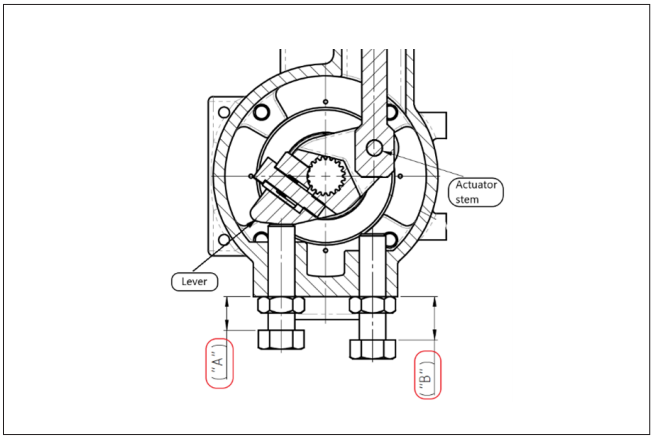

Figure 9: The stopper bolt (330) installation length

Actuator Size	Spline size	For 60 deg			
		Fail close		Fail open	
		Dim "A" lever side (mm)	Dim "B" actuator stem side (mm)	Dim "A" lever side (mm)	Dim "B" actuator stem side (mm)
NR 25	0.62	20.16	25.93	20.16	25.93
	0.88	20.16	25.93	22.99	22.81
NR 50	0.88	21.78	24.42	26.47	19.08
	1.12	21.78	24.42	21.78	24.42
NR 100	1.5	36.15	44.09	31.57	48.69

Table 8: The stopper bolt (330) installation length for 60 and 90-degree configuration.

15. Torque Requirements:

Torque requirement for CASING BOLTING (334+351, 335+351 and 209) per actuator size			
Unit	NR 25	NR 50	NR 100
N-m	8		
Ft-lb	6		

Torque requirement for COVER PLATE BOLTING (337) per actuator size			
Unit	NR 25	NR 50	NR 100
N-m	10	25	45
Ft-lb	7.4	18.4	33.2

Torque requirement for TRANSFER CASE BOLTING (256) per actuator size			
Unit	NR 25	NR 50	NR 100
N-m	10	25	62
Ft-lb	7.4	18.4	45.7

Torque requirement for VALVE/YOKE HEAD BOLTS (107) per actuator size			
Unit	NR 25	NR 50	NR 100
N-m	60	65	155
Ft-lb	44.2	47.9	114.3

Torque requirement for ACTUATOR/YOKE HEAD BOLTS (336) per actuator size			
Unit	NR 25	NR 50	NR 100
N-m	35	120	200
Ft-lb	25.8	88.5	147.5

16. Lubricants

Use		Lubricant / Anti-seize	
		WW (World-Wide)	EU (European Union)
Standard, from -22°F to +158°F -30°C to +70°C	Threads of the Actuator (107, 206, 211, 330, 334, 335, 336, 337, 361) and Guide (246).	Fastorq A/G	Klüberpaste 46 MR 401

17. Disposal

Up to 95 % of the NR rotary actuator is metal. The remaining materials are synthetic, rubber, polytetrafluoroethylene (PTFE), polycarbonate (PC), acryle, paint and lubricants.

NOTICE Potential hazards and their sources are under the operator‘s influence. The operator must observe national and international environmental conditions for rotary actuator removal from the pipeline and cleaning. Permissible limit values must be maintained to ensure suitable protective measures; service personnel must be properly instructed in performing the disassembly and reassembly procedure.

The valve should be professionally disassembled and reassembled. Metal parts should be scrapped, with the remaining materials disposed of according the national conditions.

Peripheral units (accessories) should be recycled according the relevant manufacturer‘s User Instructions.

18. Parts list

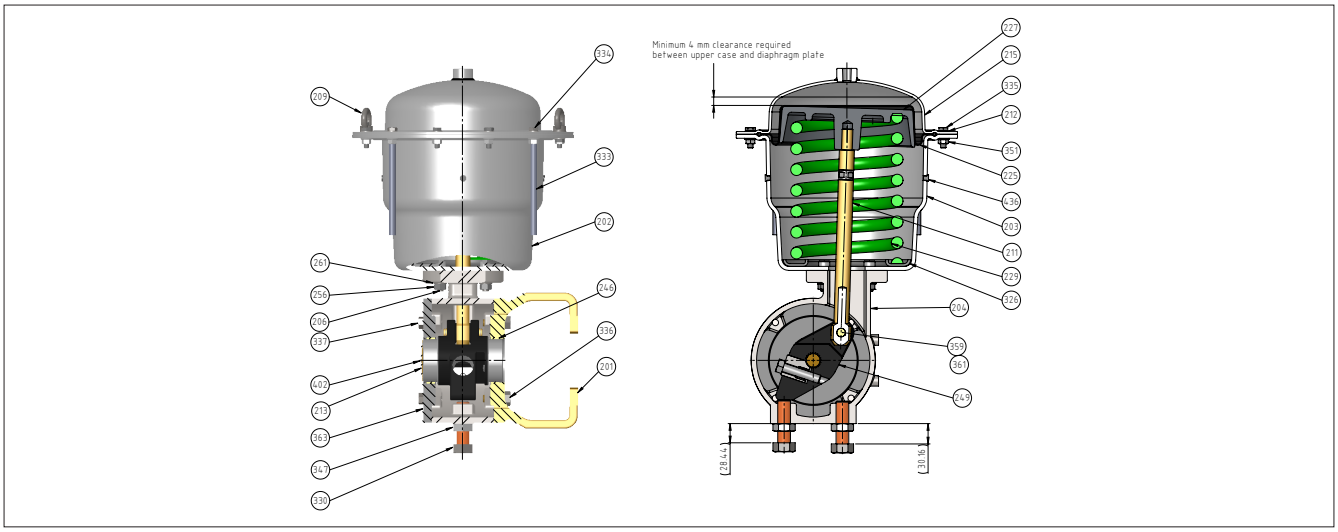

Figure 10: Final assembly drawing

Pos. No.	Description	Material of construction	Spare Parts	Maintenance (250,000 cycles) recommendation
201	YOKE	DUCTILE IRON		
203	ASSY, DIAPHRAGM CASE, LOWER	CARBON STEEL		
204	TRANSFER CASE	CARBON STEEL		
206	STUD	STAINLESS STEEL	Yes	Replace*
209	RING NUT	STAINLESS STEEL	Yes	Replace*
211	ACTUATOR STEM	STAINLESS STEEL		
212	WASHER	STAINLESS STEEL	Yes	Replace*
213	IND. PLATE	STAINLESS STEEL		
215	ASSY, DIAPHRAGM CASE, UPPER	CARBON STEEL		
225	DIAPHRAGM (STANDARD TEMPERATURE RANGE)	NBR ELASTOMER	Yes	Replace
225	DIAPHRAGM (LOW TEMPERATURE RANGE)	SILICONE	Yes	Replace
227	DIAPHRAGM PLATE	ALUMINUM		
229	SPRING, COMPRESSION	ALLOY STEEL		
246	BEARING	FILAMENT-WOUND FIBERGLASS WITH PTFE LINER	Yes	Inspect & Replace*
249	ASSY, SPLINED LEVER	DUCTILE IRON		
256	NUT	STAINLESS STEEL	Yes	Replace*
261	WASHER	STAINLESS STEEL	Yes	Replace*
326	SPRING PLATE	CARBON STEEL		
330	HEX HEAD BOLT	CARBON STEEL		
333	PIPE	PLASTIC		
334	HEX HEAD BOLT	STAINLESS STEEL	Yes	Replace*
335	HEX HEAD BOLT	STAINLESS STEEL	Yes	Replace*

*Note: * - When supply pressure >60 psi.*

Pos. No.	Description	Material of construction	Spare Parts	Maintenance (250,000 cycles) recommendation
336	BOLT	CARBON STEEL		
337	HEX HEAD BOLT	STAINLESS STEEL		
347	JAM HUT	MILD STEEL		
351	NUT	STAINLESS STEEL	Yes	Replace*
359	RET RING	STEEL	Yes	Inspect & Replace*
361	PIN	17-4 PH SS	Yes	Inspect & Replace*
363	COVER PLATE	CARBON STEEL		
402	SCREW	STAINLESS STEEL		
436	PLUG	RUBBER	Yes	Replace*

Optional manual handwheel

Pos. No.	Description	Material of construction	Spare Parts	Maintenance recommendation
337	BOLT	CARBON STEEL		
338	BOLT	CARBON STEEL		
373	KEY	CARBON STEEL		
380	ASSY, SHAFT, HANWHEEL	STAINLESS STEEL		
387	YOKE	DUCTILE IRON		
395	ACTUATOR, AMEYA, HANDWHEEL	CAST IRON		

Table 9: Actuator parts

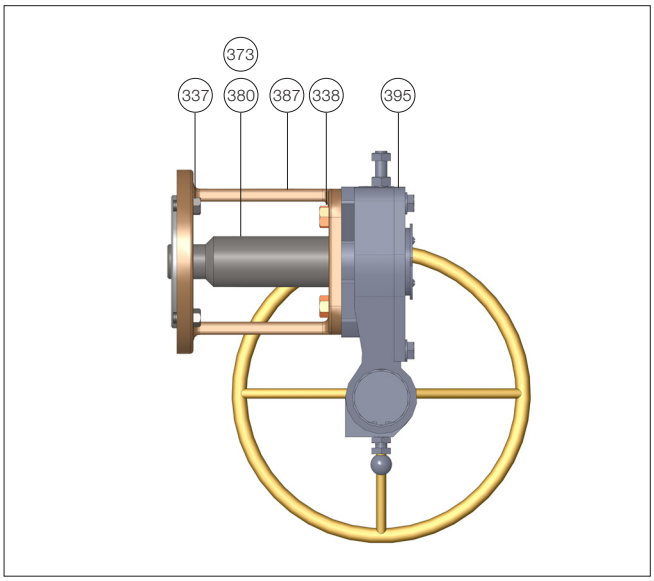

Figure 11: Declutchable Handwheel assembly drawing

Headquarters
Flowserve Corporation
5215 North O'Connor Blvd.
Suite 700
Irving, Texas 75039-5421 USA

AIIOM001478-01 (EN/A4) January 2026

Flowserve Corporation has established industry leadership in the design and manufacture of its products. When properly selected, this Flowserve product is designed to perform its intended function safely during its useful life. However, the purchaser or user of Flowserve products should be aware that Flowserve products might be used in numerous applications under a wide variety of industrial service conditions. Although Flowserve can provide general guidelines, it cannot provide specific data and warnings for all possible applications. The purchaser/user must therefore assume the ultimate responsibility for the proper sizing and selection, installation, operation, and maintenance of Flowserve products. The purchaser/user should read and understand the Installation Instructions included with the product, and train its employees and contractors in the safe use of Flowserve products in connection with the specific application.

While the information and specifications contained in this literature are believed to be accurate, they are supplied for informative purposes only and should not be considered certified or as a guarantee of satisfactory results by reliance thereon. Nothing contained herein is to be construed as a warranty or guarantee, express or implied, regarding any matter with respect to this product. Because Flowserve is continually improving and upgrading its product design, the specifications, dimensions and information contained herein are subject to change without notice. Should any question arise concerning these provisions, the purchaser/user should contact Flowserve Corporation at any one of its worldwide operations or offices.

©2026 Flowserve Corporation. All rights reserved. This document contains registered and unregistered trademarks of Flowserve Corporation. Other company, product, or service names may be trademarks or service marks of their respective companies.